H9. Fuel Cells

I. INTRODUCTION.

Chemical pollution is a serious problem that demands the attention of the scientific community in the early 21st century. The consequences of pollution are numerous: heating of the atmosphere due to greenhouse gases, modification of the ozone layer, acid rain, health of the urban population, …One of the main actors of this pollution is motorized transportation. The fight against car pollution requires the development of electrical vehicles, as long as the source used for producing electricity is clean. To fulfill the needs of people, we need a new generation of vehicles whose performances at least match the current combustion engine cars, most notably in autonomy (500 km) and charge time (a few minutes). These requirements aren't met by current electrical vehicles, that run on classical batteries (lead or cadmium nickel). The only way to overcome the limitation of the charging time is to use some sort of fuel and a device capable of converting the fuel into electric energy. This device is called a fuel cell, and is actually nothing but controlled oxidation of hydrogen by air, producing electricity and water simultaneously. The fuel cell was invented in 1839 by an English pastor, Sir William Grove, and its first spectacular application were inhabited spacecrafts (Gemini, Apollo and Space Shuttle). For car applications, the type of fuel cell that is used is an acid battery with a polymer electrolyte PEMFC (Proton Exchange Membrane Fuel Cell) with a working temperature of ~ 70 °C but already supplies a significant amount of power at room temperature. Connecting 350 cells of 250 cm^2 supplies a power of 35 kW (~47 hp) and if the system is connected to super-capacitors, it could supply an extra 15 to 20 kW for a few minutes.

II. OBJECTIVE OF THE EXPERIMENT.

We shall study hydrogen fuel cells with a solid polymer PEM (proton exchange membrane) electrolyte. We will then describe the performance (maximal power, efficiency, etc.) of each fuel cell. Finally, we will study the production of hydrogen through electrolysis, and describe the performance of the full process (production of hydrogen and fuel cell).

III. THEORY

III.1. Electrolysis of Water

Electrolysis is the process of chemical decomposition of a substance (liquid or solid) using an electric current. For instance, to electrolyze water, we can use a system made up of two tubes, connected at their bases, where the electrodes are located. This is called the *Hofmann apparatus* (fig. 1).

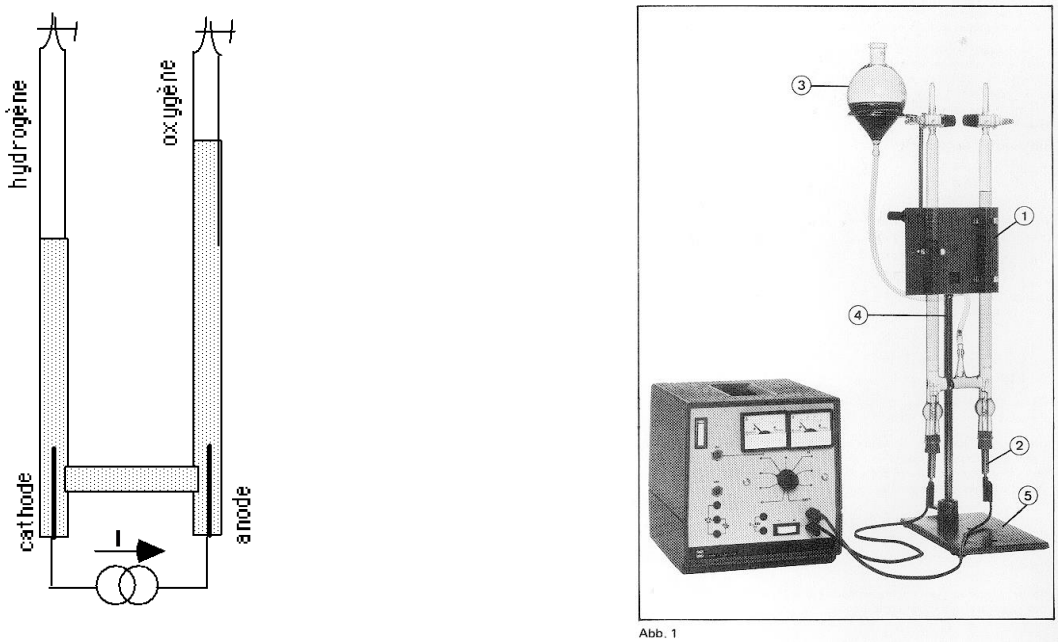

Fig. 1: Hofmann apparatus, used for electrolysis.

Chemical reactions at the electrodes

Cathode: $2\ H_2O + 2\ e^- \rightarrow H_2 + 2\ OH^-$

Anode: $2\ OH^- \rightarrow 1/2\ O_2 + H_2O + 2\ e^-$

Faraday's law: The mass m of matter freed from the electrodes is proportional to the electrical charge Q that has passed through the electrolyte, to the molar mass M of the substance, and is inversely proportional to "ν", the number of valences broken in the electrolyte (number of electrons):

$$m = \frac{1}{F} \cdot Q \cdot \frac{M}{\nu}$$

where F = 96 485 C/mol is the Faraday constant.

Since the number of moles $n = \frac{m}{M}$, we can write: $F = \frac{Q}{n \cdot \nu}$

where n is determined from the ideal gas law: $PV = nRT$

III.2. Fuel cell

The fuel cell is an apparatus allowing the inverse reaction of the electrolysis: a controlled oxidation of hydrogen, producing electricity and water simultaneously. A fuel cell is made of two electrodes (cathode and anode) separated by an electrolyte that can be liquid (potassium hydroxide KOH, phosphoric acid) or solid (conducting polymer, doped ceramic e.g. ZrO_2 doped with Y_2O_3).

The electrodes are generally made of a porous metal, allowing a rather fast diffusion of the gas, all the while stopping the inverse diffusion of the electrolyte if it's liquid. The adsorption of the reacting gas should preferentially be done to the combustible product, in order to preserve the catalyst.

If we look at the periodic table, we notice that elements such as Ni, Ag, Pt, Pd, … are electronegative with respect to hydrogen and electropositive with respect to oxygen. They can therefore be used for both electrodes (cathode and anode), since they are capable of ionizing both gases.

Liquid Electrolyte Fuel Cell (KOH)

Chemical reactions at the electrodes:

cathode: $1/2\ O_2 + H_2O + 2\ e^- \rightarrow 2\ OH^-$

the OH^- ions move from the cathode to the anode through the electrolyte (KOH)

anode: $H_2 + 2\ OH^- \rightarrow 2\ H_2O + 2\ e^-$

electrons freed at the anode go back to the cathode through the outer circuit.

***Solid PEM Electrolyte Fuel Cell (Proton Exchange Membrane)*:**

Chemical reactions at the electrodes:

anode: $H_2 \rightarrow 2\ H^+ + 2\ e^-$

the H^+ ions move from the anode to the cathode

cathode: $1/2\ O_2 + 2\ H^+ + 2\ e^- \rightarrow H_2O$

A single cell (fig. 2) consists of two gas flow plates, one for hydrogen and one for oxygen, separated by a membrane electrode assembly, abbreviated MEA. The flow plates contain channels to ensure that the gases are in contact with as much of the MEA as possible.

The MEA consists of two porous carbon-cloth electrodes bonded a polymer electrolyte membrane (50 – 175 μm thick). This material, the electrolyte, allows the conduction of hydrogen protons from one side of the membrane through to the other. At the same time, it prevents oxygen molecules from flowing in the reverse direction.

On the electrodes are nano-sized particles of platinum. The platinum acts as a catalyst for the redox reaction to take place. Initially the hydrogen molecules are chemically adsorbed onto the platinum surface, forming hydrogen-platinum bonds. Platinum is unique in that it has the ideal bonding strength to both break the hydrogen molecule bond, to form the hydrogen-platinum bonds, while being able to release the hydrogen, allowing the redox reaction to proceed.

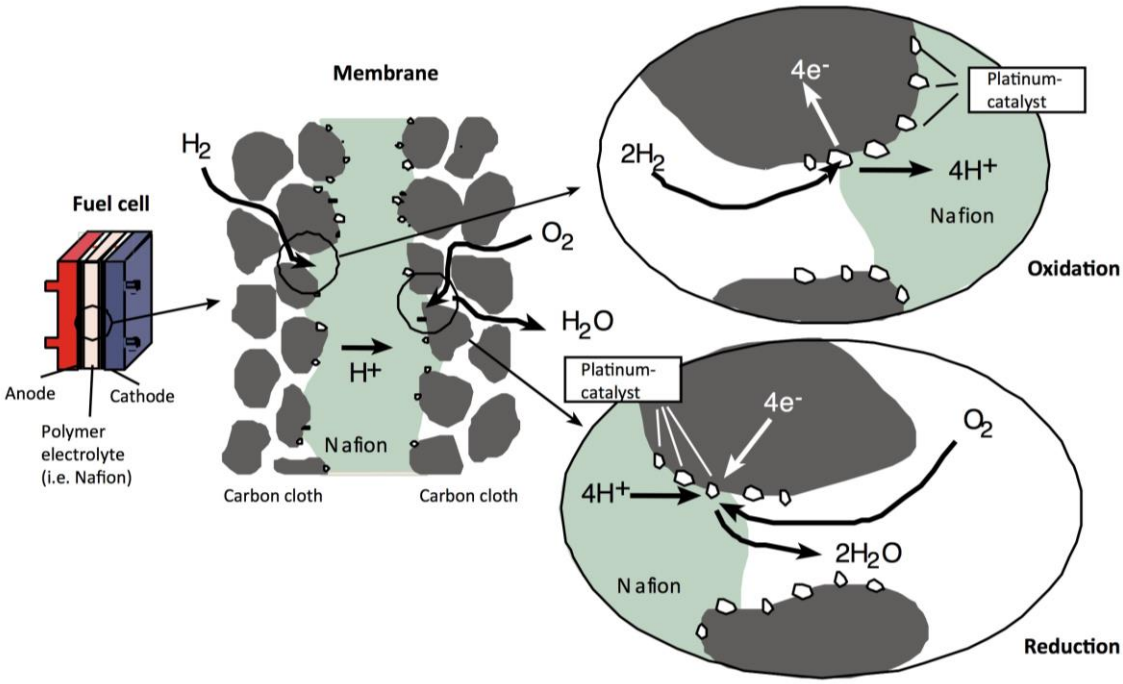

Fig. 2: Cross-section of a polymer electrolyte membrane electrode assembly, illustrating the processes taking place during the fuel-cell reactions.

Fuel cells also have losses, due to the internal membrane permeability as well as due to polarization phenomena that generate a voltage drop within the fuel cell. That means that it is impossible to convert 100% of the gases into electrical energy.

The Faraday efficiency η_F of a fuel cell can be calculated as the ratio between the amount of moles of electrons produced and the amount of moles of gas consumed. Or, shown in another way:

$$\eta_F = \frac{\text{Mass of fuel reacted in cell}}{\text{Mass of fuel input in cell}} = \frac{V_{H_2}\left(\text{calculated}\right)}{V_{H_2}\left(\text{consumed}\right)}$$

The volume that theoretically reacted in the cell $V_{H_2}\left(\text{calculated}\right)$ is obtained from the mean current and measurement time using the Faraday's law and the ideal gas equation.

The energy efficiency η_E could be defined as the ratio between the electrical energy (E_{el}) produced and the energy of consumed hydrogen ($E_{Hydrogen}$):

$$\eta_E = \frac{E_{el}}{E_{H_2}}$$

The latter is calculated from the formation energy of water H_{H_2O} = 285.84 kJ/mol:

$$E_{H_2} = n \cdot H_{H_2O}$$

using again the ideal gas equation to calculate *n* from the $V_{H_2}\left(\text{consumed}\right)$.

IV. EXPERIMENTS

1. Production of hydrogen and oxygen through electrolysis.

- A Hofmann apparatus is available for electrolyzing water (fig. 1). The glass tubes are filled with water and a small amount of sulfuric acid, to increase the ionic conductivity of the water, for an easier start of the process.
- **The voltage applied to the electrodes should not exceed 15 V.**
- Open the valves at the top of the tubes to equilibrate the water levels.
- Close the valves and record the volume of the produced gases as a function of time.
- Verify Faraday's law, i.e. determine Faraday's constant using data for both gases.

2. Connecting the plastic electrolyser and the fuel cell

- Make sure both of the gas storage cylinders of the electrolyser are filled with **distilled water** up to the 0 ml mark**.**
- Connect the power supply to the positive and negative poles of the electrolyser cell. **Pay attention to polarity.**
- Turn on the power supply and set a voltage of ~3.6 V and a current of ~1.4 A. **Never use more than 4 V or 2 A!**
- Check that gases are being produced, observation of gas bubbling up through the distilled water in the reservoir.
- Connect the fuel cell to the electrolyser as shown in fig. 3.
- Connect the fuel cell to a charge resistance according to figure 3. Make sure that the charge is at least 1 MΩ before connecting it to the cell. Verify that the voltmeter displays an open circuit voltage between 0.8 and 1V and that zero current passes through the fuel cell.

- Purge the complete system (consisting of the electrolyser, fuel cell and tubes) for 2 minutes with the gases produced. Then set the charge to 3 Ω for 3 minutes. The ammeter should already show a current. Purge the system again with the charge of at least 1 MΩ for 2 minutes.
- Use the stoppers to close the two short tubes at the gas outlets of the fuel cell.
- Interrupt the power supply when the hydrogen side of the electrolyser has reached the 10 ml mark.

3. Characteristic curve

- Record the characteristic curve of the fuel cell by varying the measurement resistance.
- Record the voltage and the current for each resistance and calculate the power.
- At higher currents, the hydrogen will be very quickly consumed. **Make sure you always supply the fuel cell with hydrogen. The fuel cell can undergo serious damage if it is forced to supply a current with an insufficient hydrogen supply. Never let the water level go above 0 cm^3 mark.** Restart the power supply if necessary and don't wait too long to make a measurement (~30 s).
- Plot the fuel cell's voltage and the power versus current.

4. The fuel cell's efficiency

- Since the whole system always has a certain leakage rate because of its tubes and seals, a blank measurement must be made first. Switch on the power supply and refill the hydrogen storage cylinder to the 80 cm^3 mark. Record the loss of hydrogen from the hydrogen storage cylinder without a load (open circuit) at the fuel cell, over a period of 5 minutes. Determine the leakage rate in ml of hydrogen per minute.
- Switch on the power supply and refill the hydrogen storage cylinder to the 80 cm^3 mark.
- Set the charge resistance to 2 Ω. Record the volume of hydrogen used in 180 s. Also measure and record voltage and current at the fuel cell. After 180 s disconnect the charge or make sure that the charge is at least 1 MΩ. You can repeat the procedure two times to calculate the average of value of the hydrogen used.
- Calculate the average volume of hydrogen consumed by the cell. Determine the Faraday efficiency of the fuel cell. Determine the energy efficiency of the fuel cell.

5. Use in the same way the other two fuel cells, plot the cell's voltage and the power versus current and calculate the efficiency of the cells. Discuss the effect of the catalyst.

6. Optionally, if you have time, calculate the efficiency of the electrolyser from the ratio of the energy of hydrogen produced and the electric energy needed.

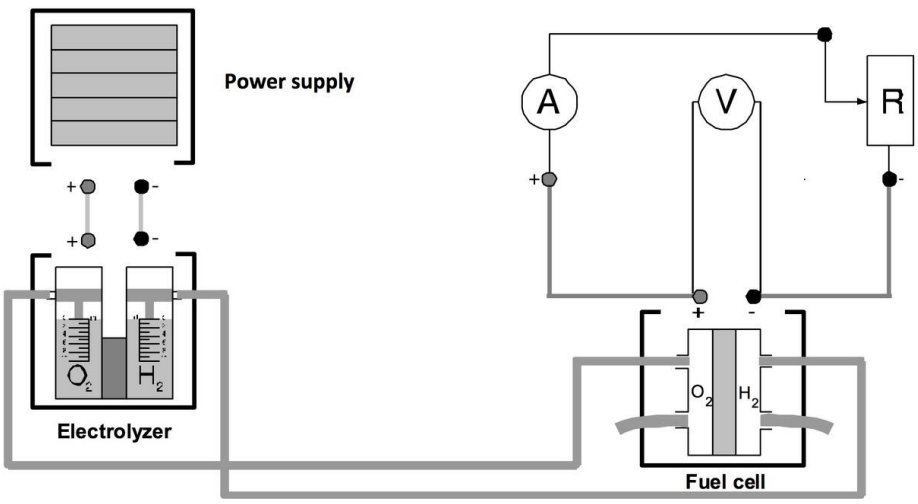

Fig. 3: Scheme of the experimental setup