HOW TO USE THE SYSTEM (1)

IN WAFER CONFIGURATION

I. Login / logout

1. Login on the PC zone 4
2. Login on Beneq laptop (if it's not already done)
3. Press the button "Control" to open the window "Control" on the Beneq laptop
4. Click on Login:

Enter : ***oper*** and press return

Click on Password :

Enter : ***oper*** and press return

Once all your depositions are finished, the equipment come back in idle mode:

1. Switch off the heating if you are the last user
2. Fill the notebook
3. Log out on the PC zone 4

HOW TO USE THE SYSTEM (2)

IN WAFER CONFIGURATION

II. Setting of the reactor and precursors temperatures

On the control window, you click on the black number corresponding to the reactor temperature and to the precursor temperature and you enter the temperate requested for the deposition (see below). It takes roughly 50 min for the reactor to get 200°C from room temperature and 1 hour for the hot sources.

Al_2O_3 : Chamber: 100 to 300°C
Liquid precursor 2 (TMA): room temperature

TiO_2 : Chamber: 80 to 200°C or 250°C
Liquid precursor 3 (TiCl4): room temperature

AlN : Chamber: 300°C or 375°C
Liquid precursor 2 (TMA): room temperature

ZnO : Chamber: 200°C
Liquid precursor 4 (BTBAS): room temperature

Ni or NiOx: Chamber: 245°C or 200°C
Hot source 1 ($NiCp_2$) : 80°C

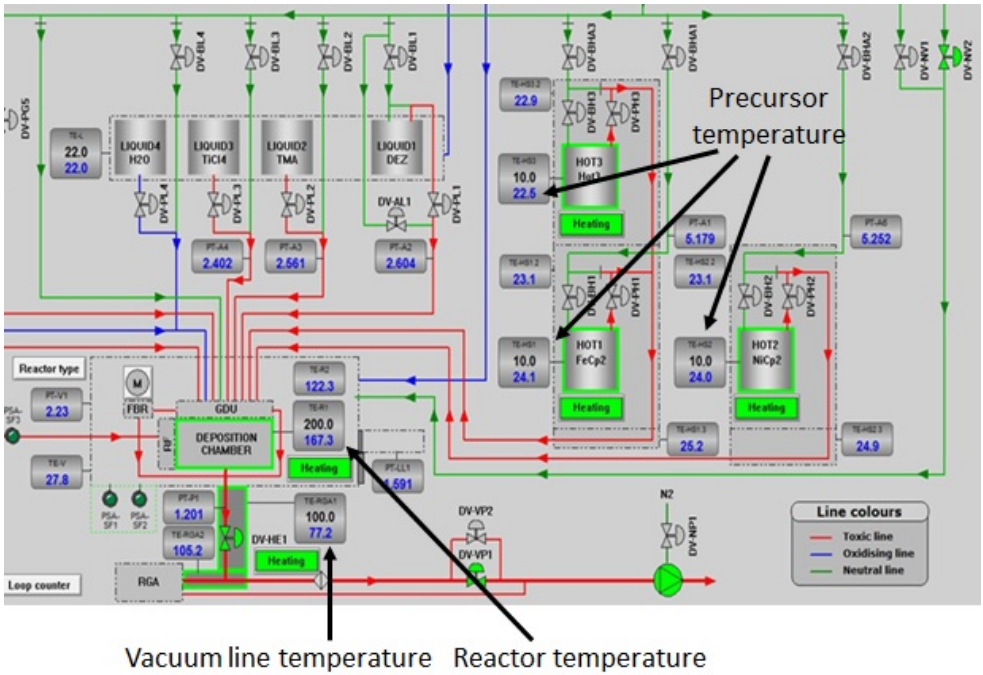

HOW TO USE THE SYSTEM (3)

IN WAFER CONFIGURATION

III. Wafer loading

1. Press on the load lock button (menu bar)
2. Press on load-lock vent and wait until the load-lock is at atmospheric pressure
3. Open the load-lock door
4. Load your wafer/samples
5. Close the load-lock door and press on load-lock pump down
6. Checking of the wafer position
7. Open gate valve
8. Manual transfer of the wafers in reactor with the substrate loader
9. Move up the substrate lifter
10. Move back the substrate loader in home position
11. Move down the substrate lifter
12. Move up the holder lifter
13. Close the gate valve

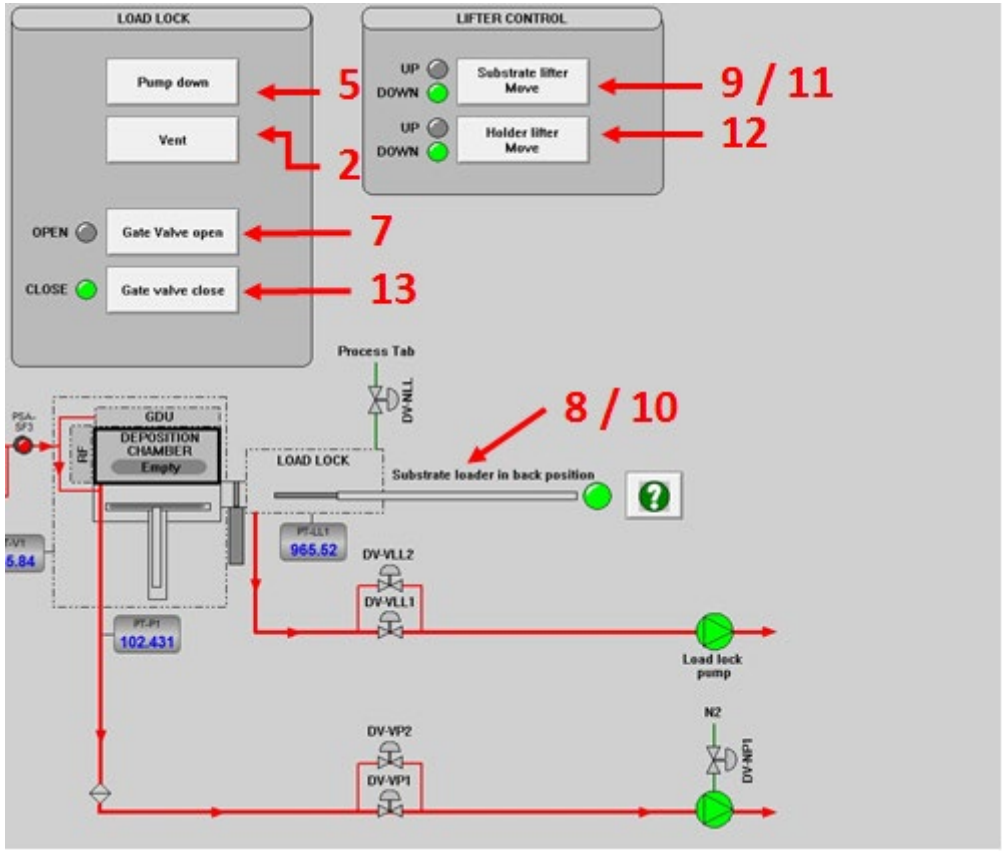

HOW TO USE THE SYSTEM (4)

IN WAFER CONFIGURATION

IV. Starting a recipe

Before starting the recipe, the chamber pressure has to be higher than 5 mbar and the reactor pressure lower than 2 mbar for NOV and NOP at 300 sccm and reactor temperature around 200C.
If it's not the case move down and up the substrate lifter or restart the loading procedure.

1. Go to the window **"Control"**
2. Select your recipe in the recipe folder
3. Press **Compile and download the recipe**
4. Press **Start batch** and follow the instructions (open precursor valves etc ….)
5. In the menu "Start batch confirmation", double check
   - if the pump is running
   - if the gate valve is closed
   - Enable the ozone generator if needed
   - Switch on the plasma power if needed

And then press **Start batch** one more time

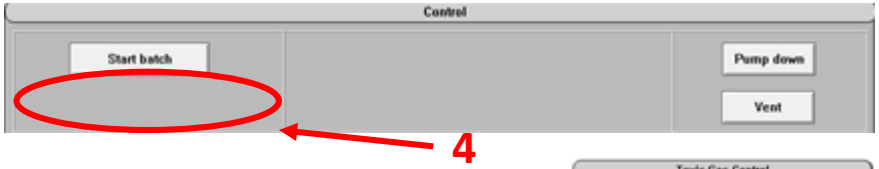

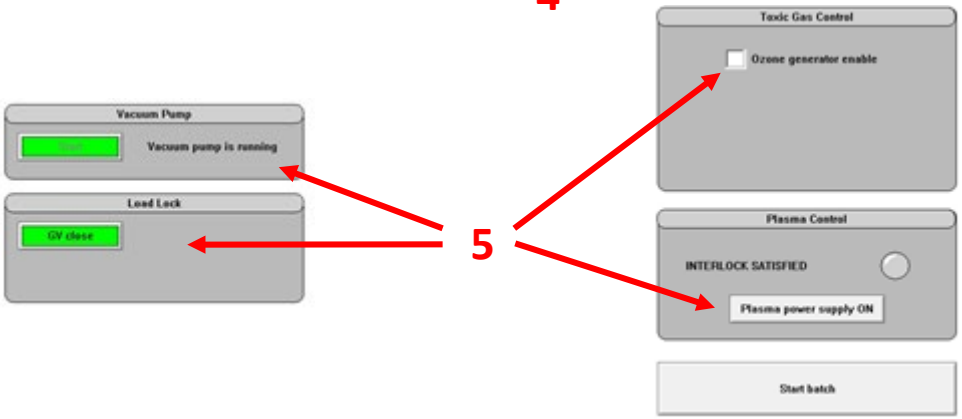

HOW TO USE THE SYSTEM (5)

IN WAFER CONFIGURATION

Valves setting during deposition

Al_2O_3 : Open the hand valves (right ones) of liquid precursor 4 (H_2O) & liquid precursor 2 (TMA)

AlN : Open the hand valve (right one) of liquid precursor 2 (TMA) / gas precursors (NH_3) & (N_2) already open

TiO_2 : Open the hand valves (right ones) of liquid precursor 4 (H_2O) & liquid precursor 3 ($TiCl_4$)

ZnO : Open the hand valves (right ones) of liquid precursor 4 (H_2O) & liquid precursor 1 (DEZ)

Ni and NiOx : Hot source 1 is already open ($NiCp_2$) / gas precursors (O_3) or (NH_3) already open

HOW TO USE THE SYSTEM (6)

IN WAFER CONFIGURATION

V. Setting the number of cycles - Process end

The number of cycles can be set by clicking on the location (1) below :

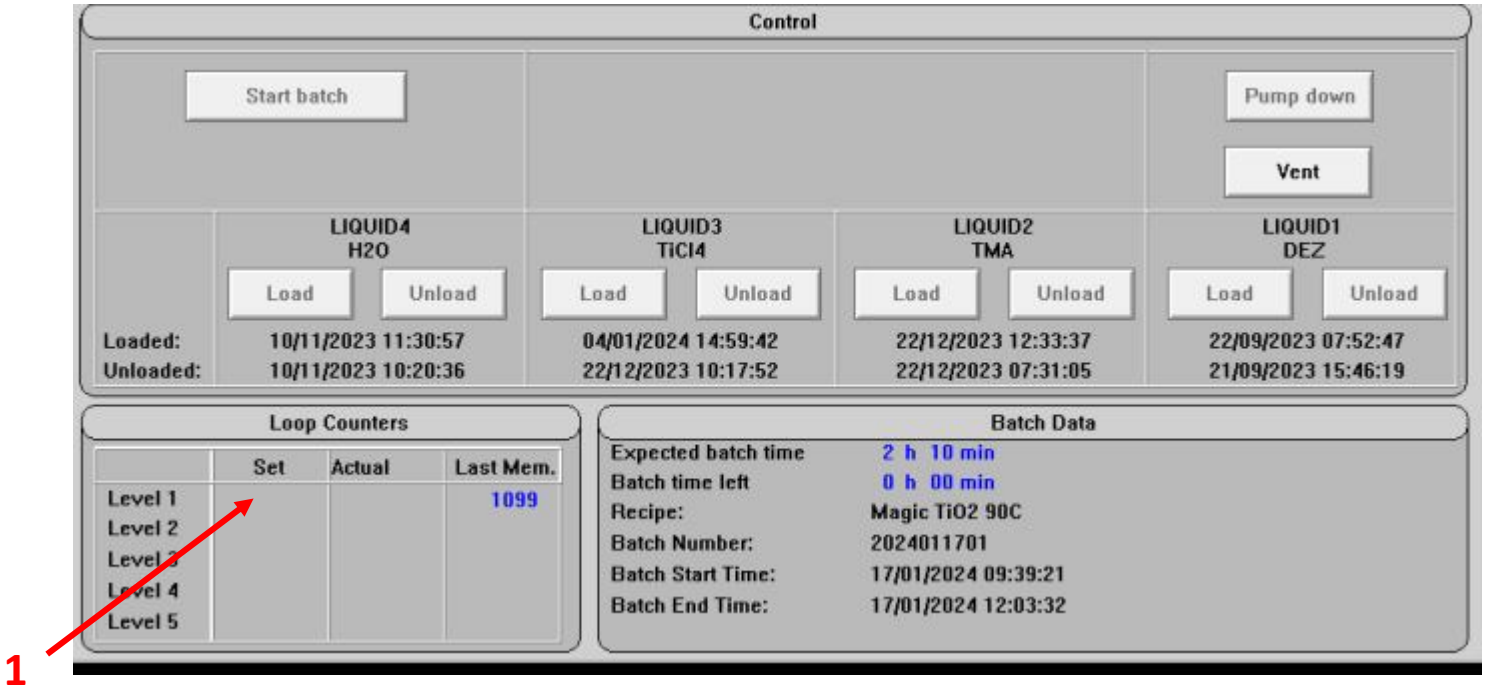

At the end of the deposition, close the hand valve if requested.

Then, there will be a waiting time (up to 5 minutes, depending on the recipe) for purging lines, before the tool goes back to IDLE mode.

HOW TO USE THE SYSTEM (7)

IN WAFER CONFIGURATION

VI. Wafer unloading

1. Go the window Load lock
2. Open the gate valve
3. Move down the holder lifter
4. Move up the substrate lifter
5. Transfer of the substrate loader in the reactor
6. Move down the substrate lifter
7. Move back the substrate loader in home position
8. Close the gate valve
9. load-lock vent / wafer unloading
10. Open the load-lock door and take your wafers
11. Close the load-lock door and then clic on load-lock pump down
12. Wait for the message **"Load-lock vacuumize. Close load-lock lid. Press yes to continue"** and press **Yes**
13. Wait for the message **"Load-lock vacuumize. Gate valve can be opened. Press yes to continue"** and press **Yes**