SCCER - FURIES
Shaping the FUtuRe SwIss Electrical InfraStructure

Schweizerische Eidgenossenschaft
Confédération suisse
Confederazione Svizzera
Confederaziun svizra

Swiss Confederation

**Innosuisse – Swiss Innovation Agency**

Zürcher Hochschule
für Angewandte Wissenschaften

zh aw School of Engineering

# SCCER-FURIES

Dr. Dobrowolski Jean, ZHAW

**SCCER-FURIES Annual Meeting, October 28th 2020**

# *Dynamic Transmission System Emulator for Stability Assessment*

**For more information : xdow@zhaw.ch**

xdow@zhaw.ch

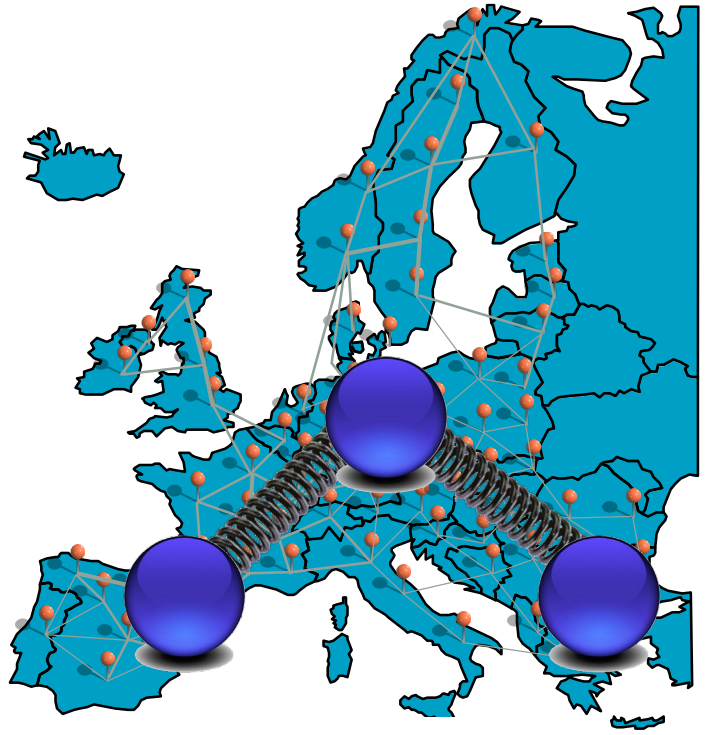

Transmission grid instabilities

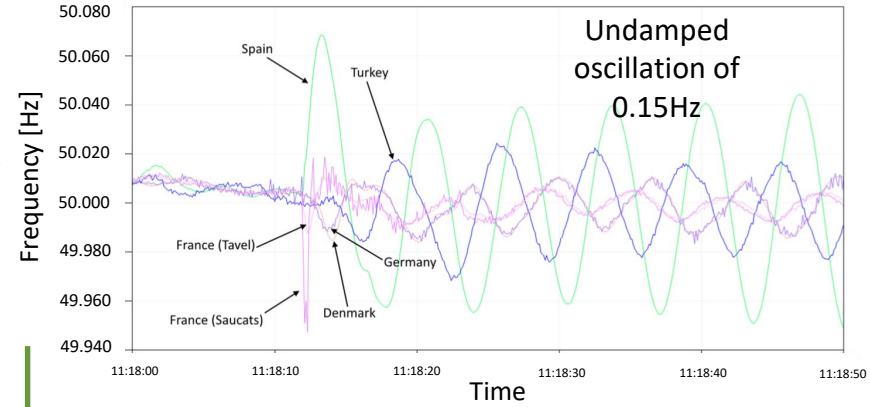


Control solutions to improve stability

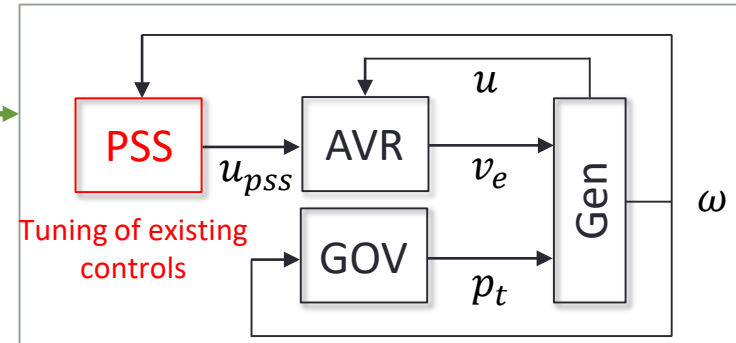


Tuning of existing controls

Real time simulator

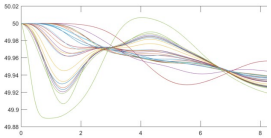

Simulations

Test solutions

Control in the loop

Design of new control chain

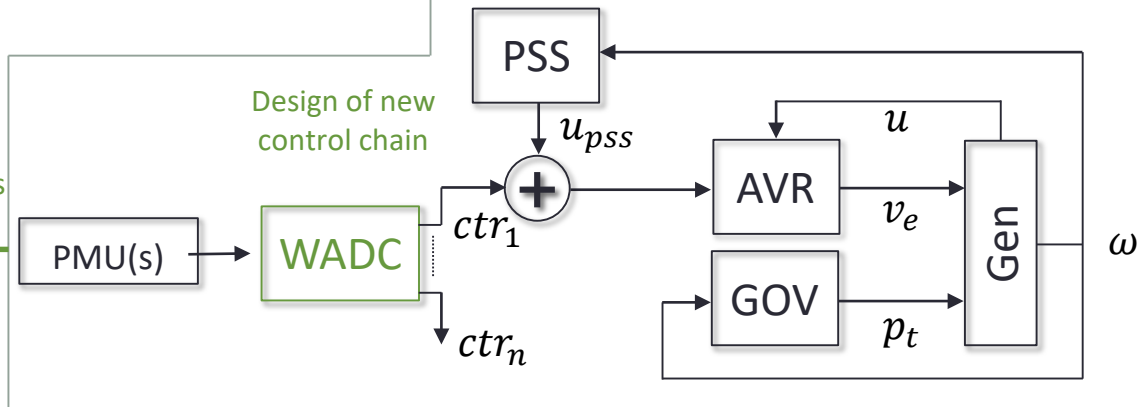

## European model (entso-e):

- 6147 generators
- 23253 buses
- 7377 loads
- 3-4 areas

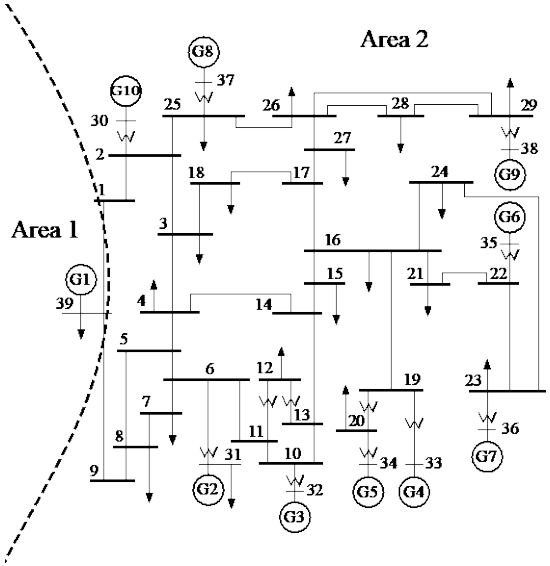


## New England model:

- 10 generators
- 39 buses
- 19 loads
- 2 areas

## Kundur two-areas model:

- 4 generators
- 11 buses
- 2 loads
- 2 areas

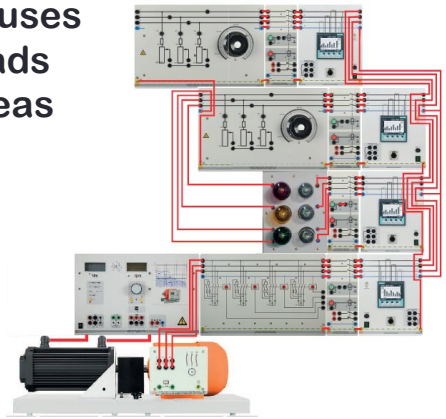

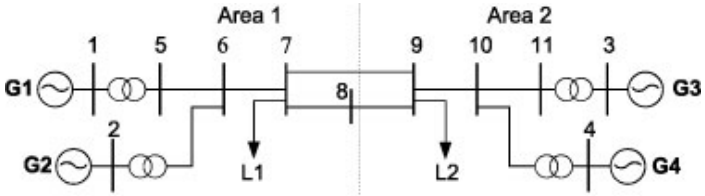

# Outline

- Kundur's Original Model
- Scaling in ZHAW Laboratory
- Some results
- Perspectives
- Conclusion

# Kundur's original model

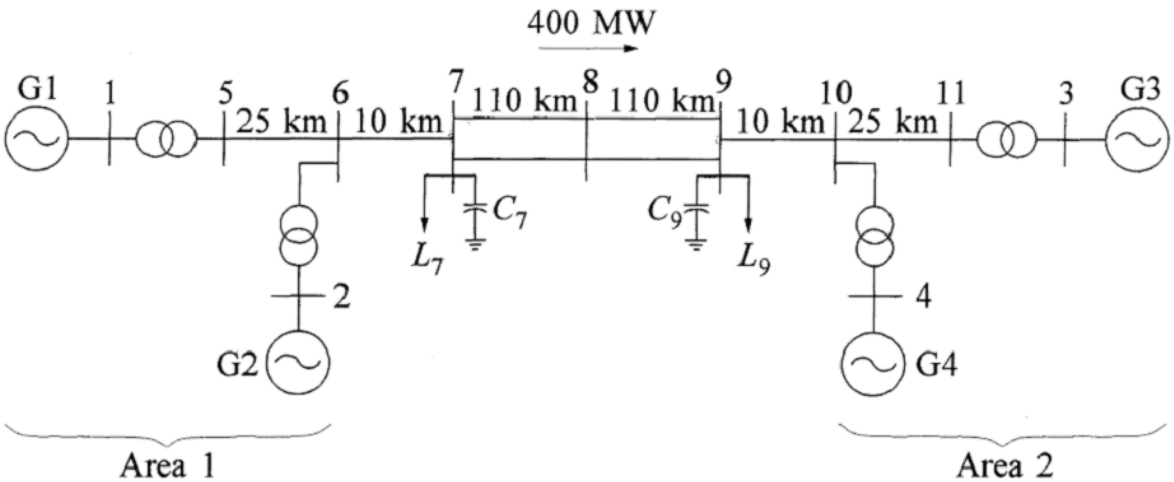


**The smallest representation of a transmission grid**

- 4 generators
- 11 buses
- 2 loads
- 2 areas

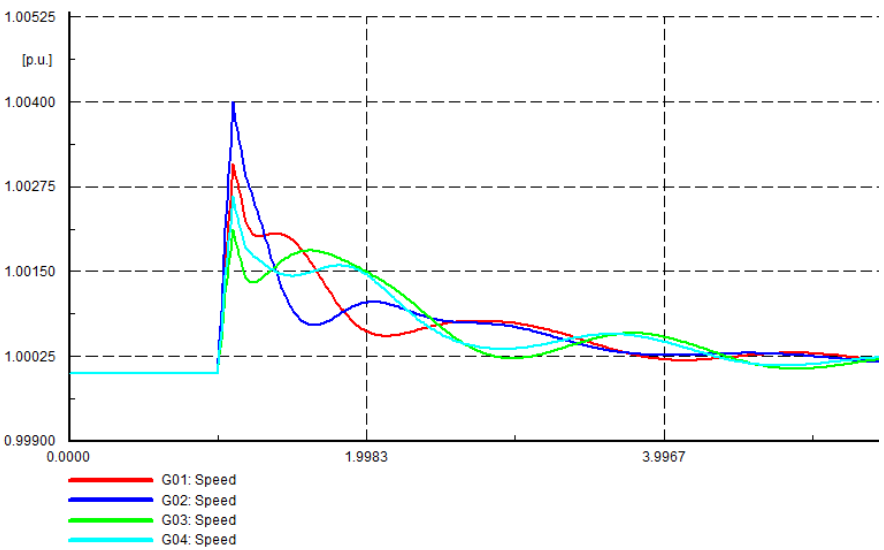


| | Name | Real part 1/s | Imaginary part rad/s | Magnitude 1/s | Angle deg | Damped Frequency Hz | Period s | Damping 1/s | Damping Ratio |
|---|---|---|---|---|---|---|---|---|---|
| | Mode 00001 | -2.050181 | 6.834751 | 7.135619 | 106.697369 | 1.087784432 | 0.919299 | 2.050181 | 0.2873165 |
| | Mode 00002 | -2.132377 | 6.116780 | 6.477810 | 109.219124 | 0.973515794 | 1.027204 | 2.132377 | 0.3291818 |
| | Mode 00003 | -0.469408 | 3.224757 | 3.258742 | 98.282031 | 0.513236022 | 1.948421 | 0.469408 | 0.1440458 |
| | Mode 00004 | -8.427680 | 3.262835 | 9.037249 | 158.835739 | 0.519296371 | 1.925682 | 8.427680 | 0.9325491 |
| | Mode 00005 | -1.443360 | -0.000000 | 1.443360 | -180. | 0. | 0. | 1.443360 | 1. |
| | Mode 00006 | -0.048227 | 0.000000 | 0.048227 | 180. | 0. | 0. | 0.048227 | 1. |
| | Mode 00007 | -0.715944 | 0. | 0.715944 | 180. | 0. | 0. | 0.715944 | 1. |
| | Mode 00008 | -0.501082 | 0.029956 | 0.501977 | 176.578730 | 0.004767722 | 209.743747 | 0.501082 | 0.9982177 |
| | Mode 00009 | -0.501082 | -0.029956 | 0.501977 | -176.578730 | 0.004767722 | 209.743747 | 0.501082 | 0.9982177 |
| | Mode 00010 | -0.346703 | -0. | 0.346703 | -180. | 0. | 0. | 0.346703 | 1. |
| | Mode 00011 | -2.586386 | 0.233491 | 2.596904 | 174.841480 | 0.037161363 | 26.909669 | 2.586386 | 0.9959497 |
| | Mode 00012 | -3.897253 | 0.471892 | 3.925719 | 173.096046 | 0.075104004 | 13.314869 | 3.897253 | 0.9927490 |
| | Mode 00013 | -3.075658 | 0.000000 | 3.075658 | 180. | 0.000000000 | 0. | 3.075658 | 1. |
| | Mode 00014 | -2.586386 | -0.233491 | 2.596904 | -174.841480 | 0.037161363 | 26.909669 | 2.586386 | 0.9959497 |
| | Mode 00015 | -4.114402 | -0.000000 | 4.114402 | -180. | 0.000000000 | 0. | 4.114402 | 1. |
| | Mode 00016 | -4.768618 | 0.000000 | 4.768618 | 180. | 0.000000000 | 0. | 4.768618 | 1. |
| | Mode 00017 | -0.100265 | 0.000000 | 0.100265 | 179.999999 | 0.000000000 | 0. | 0.100265 | 1. |

xdow@zhaw.ch

# ZHAW laboratory

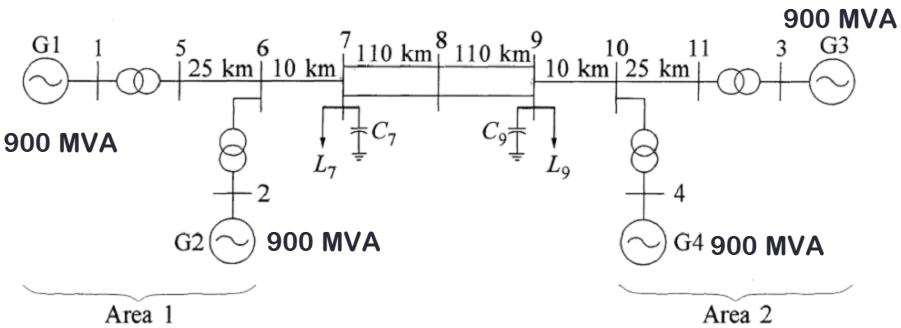


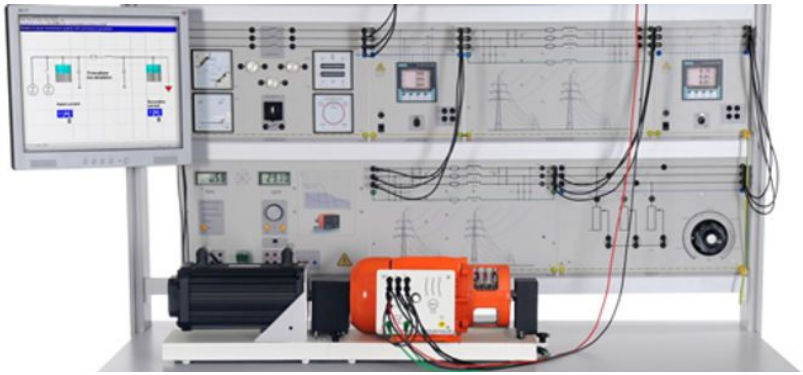

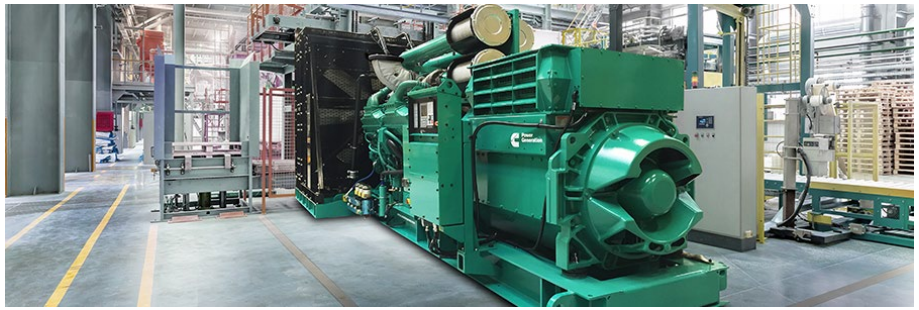

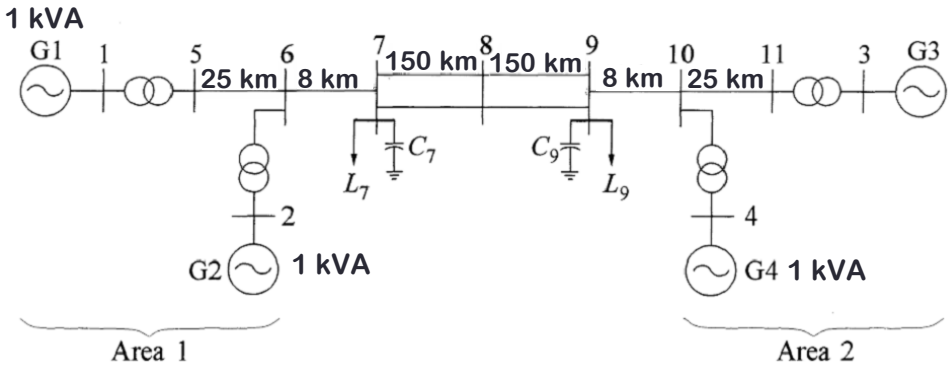


# Original model

# Final implementation

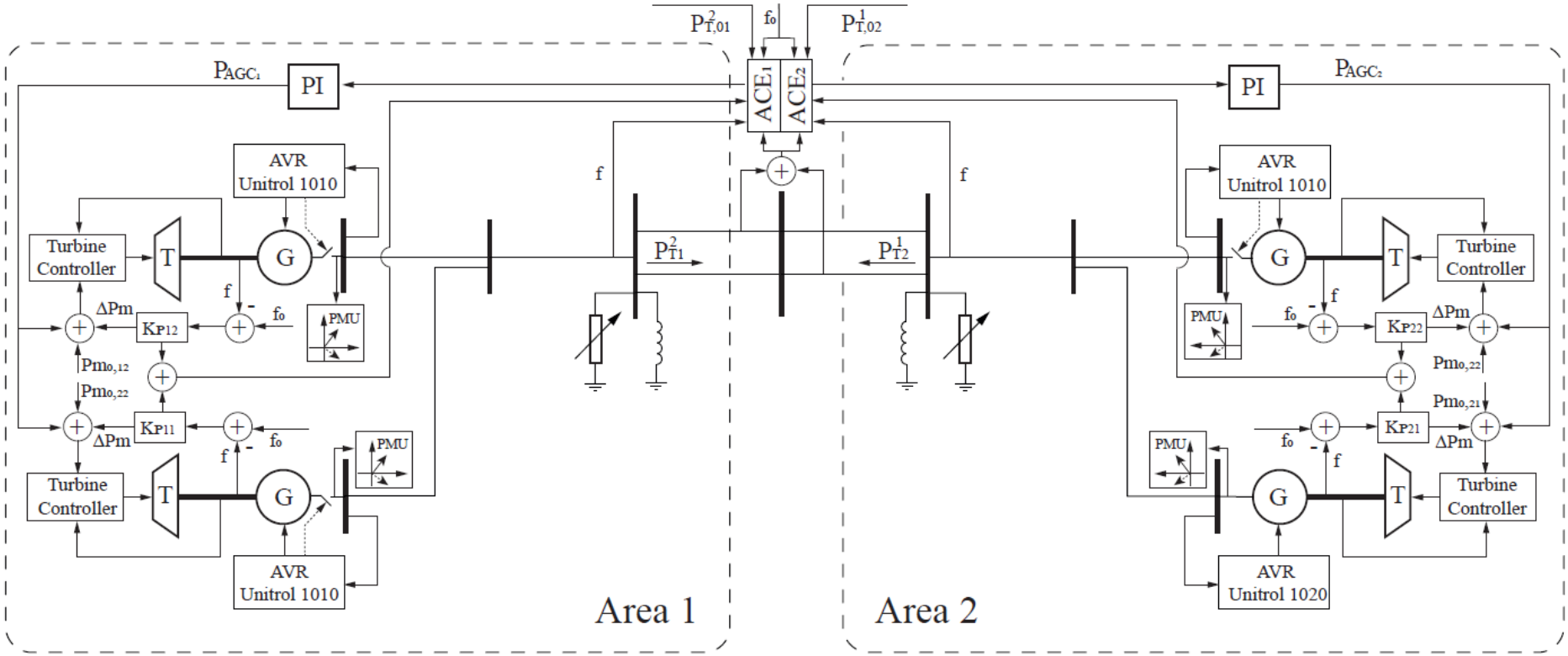

## Without inertia

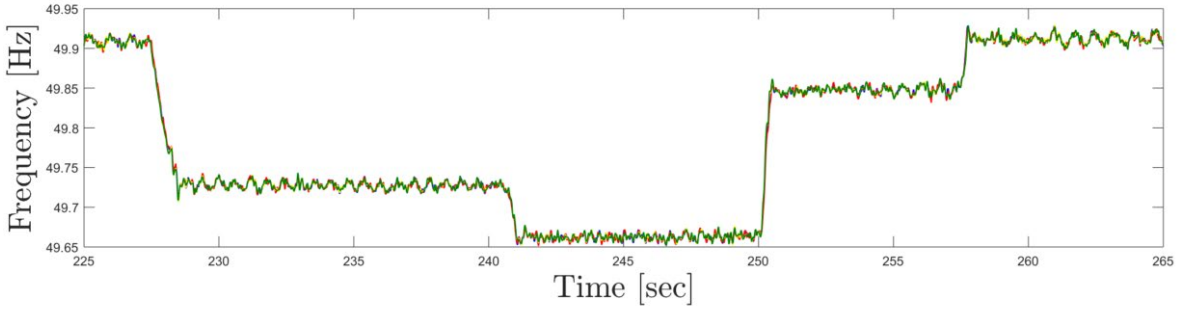


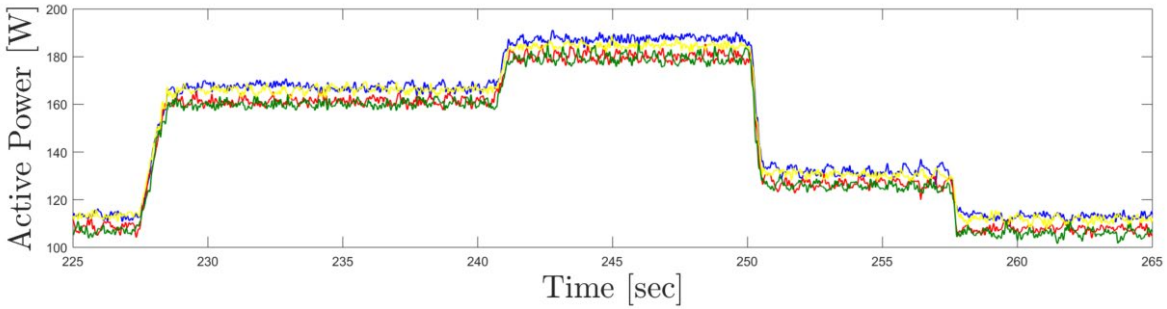


## Laboratory view

## Settings

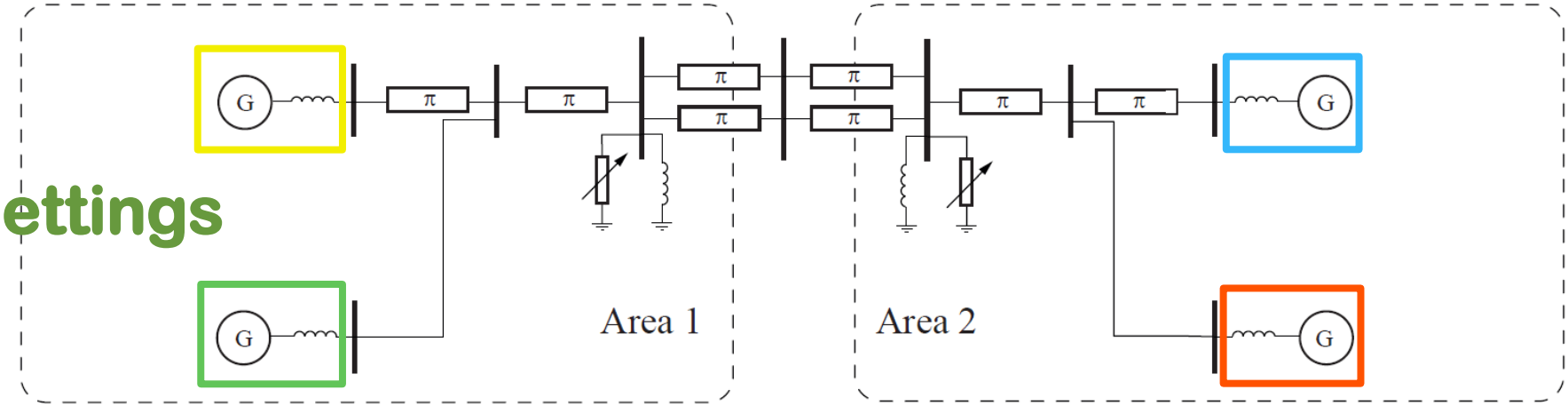

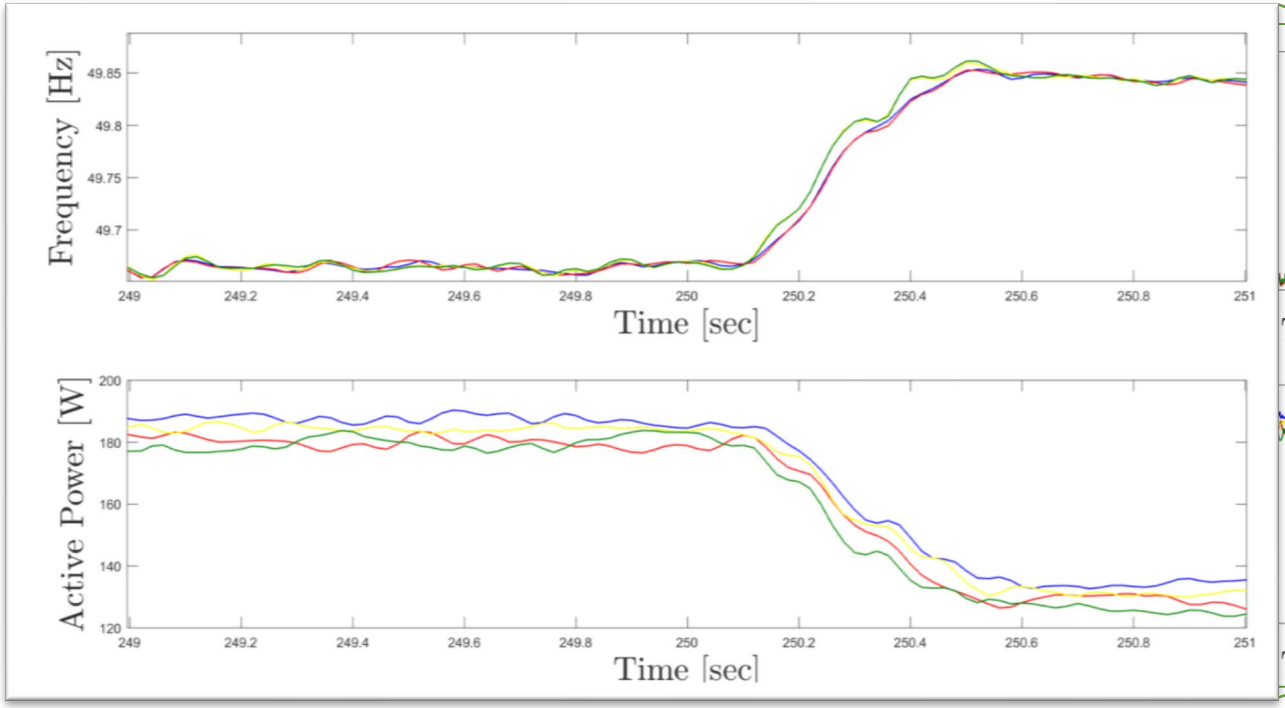
Frequency [Hz]
49.85
49.8
49.75
49.7
249
249.2
249.4
249.6
249.8
250
250.2
250.4
250.6
250.8
251
Time [sec]
Active Power [W]
200
180
160
140
120
Time [sec]

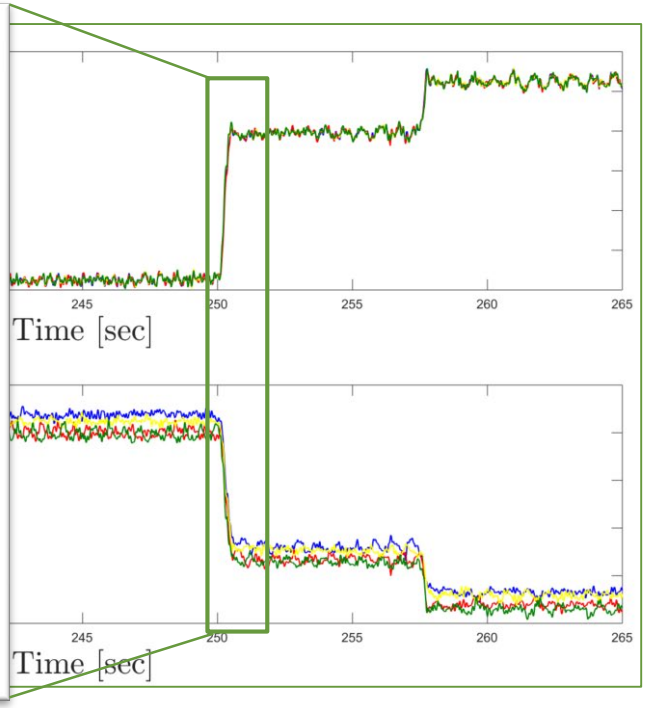
245
250
255
260
265
Time [sec]
Time [sec]

# Settings

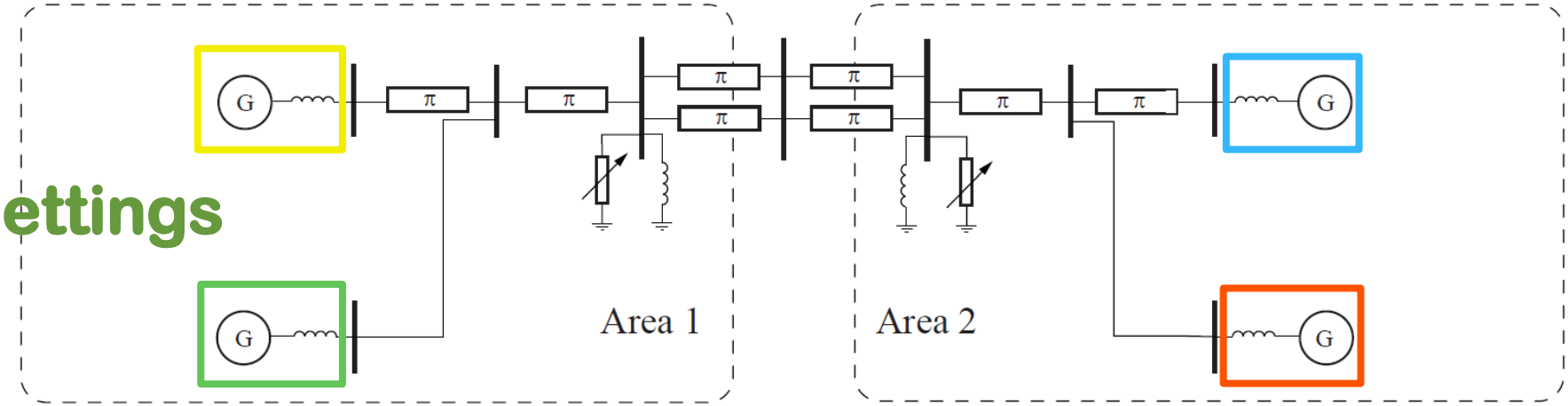
G
π
Area 1
Area 2

# Effect of inertia

Frequency [Hz]

Active Power [W]

## Laboratory view

## Settings

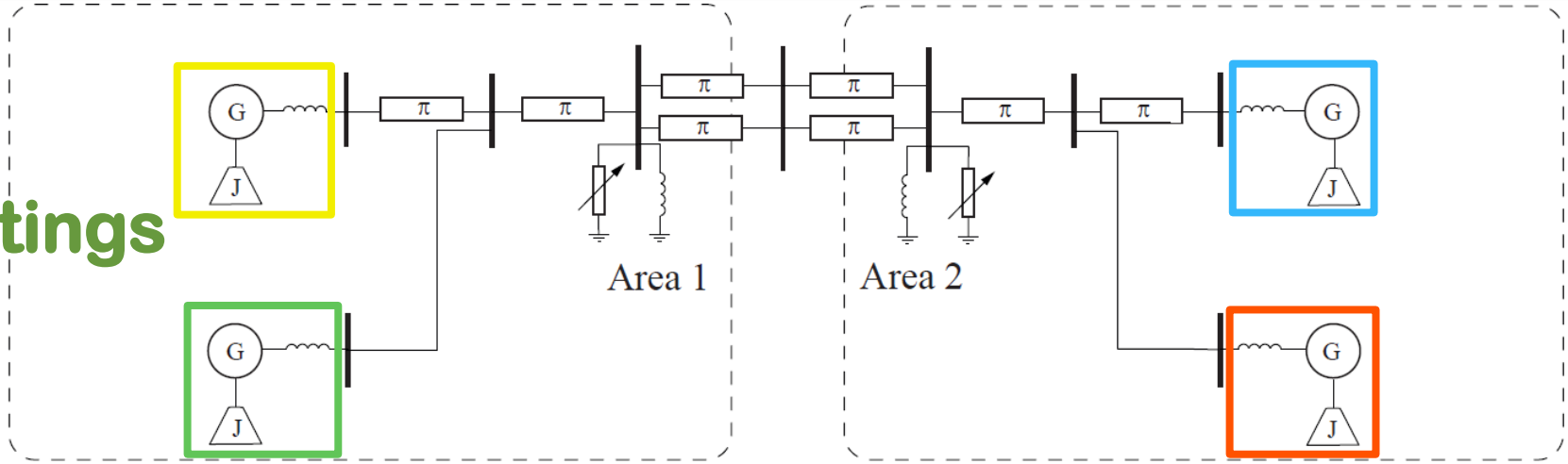

# Effect of inertia

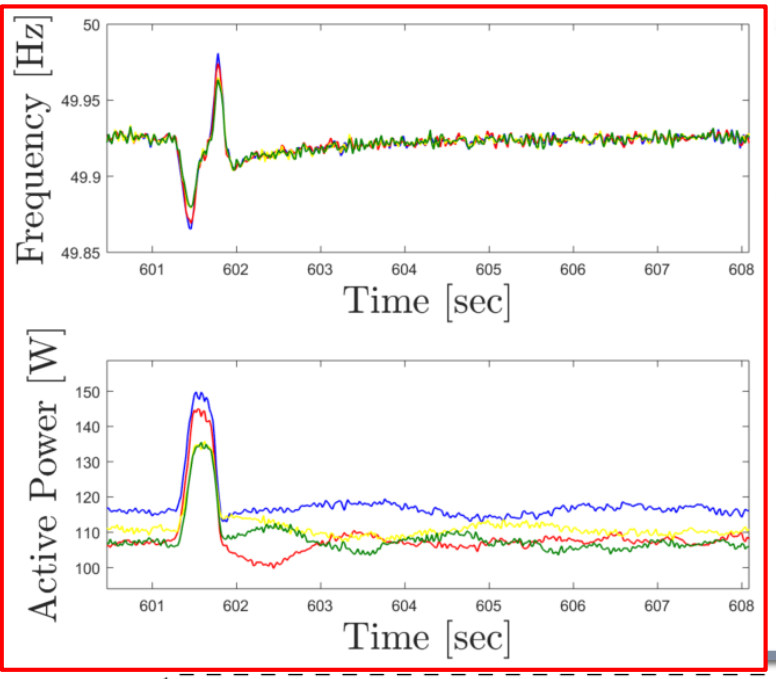


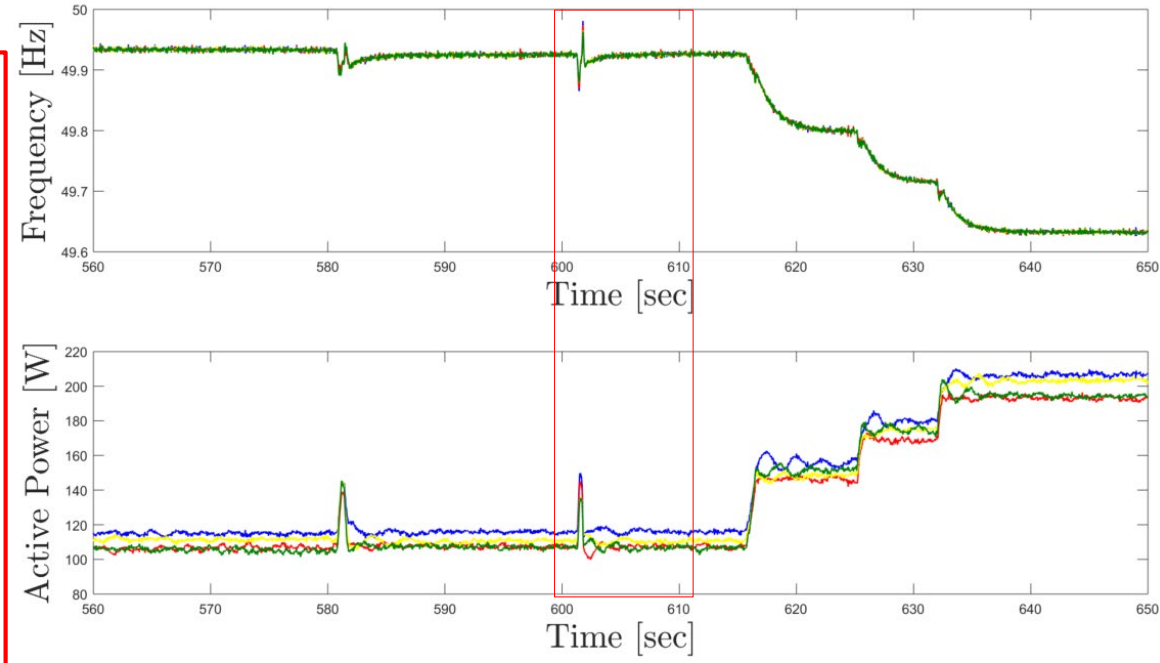


## Settings

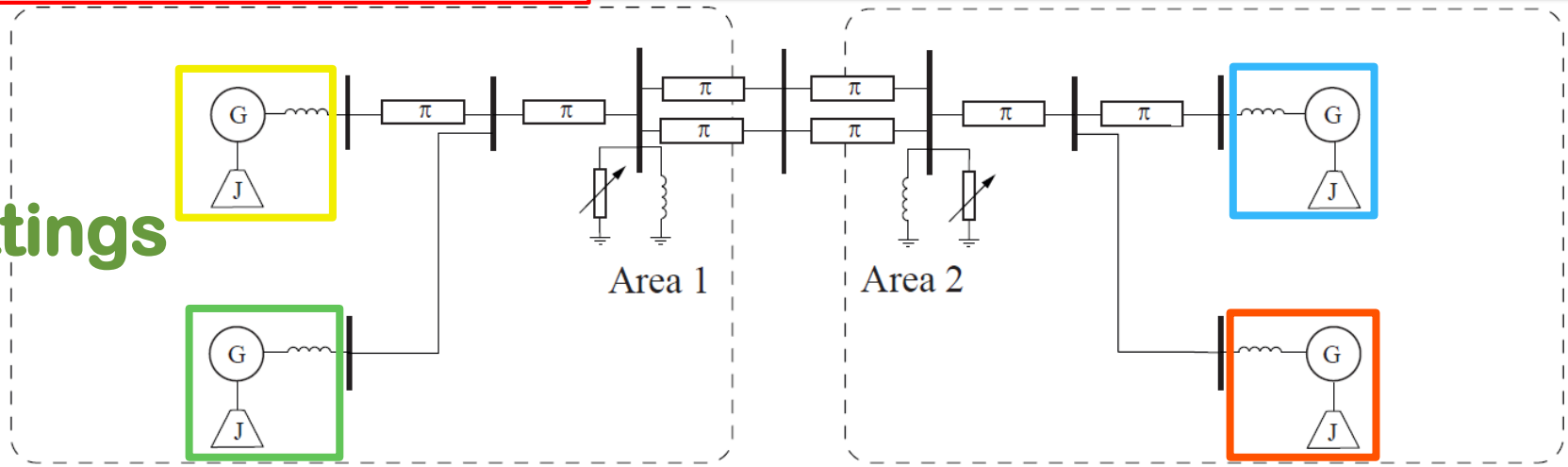

# Trip of a line

Frequency [Hz]

Active Power [W]

## Laboratory view

## Settings

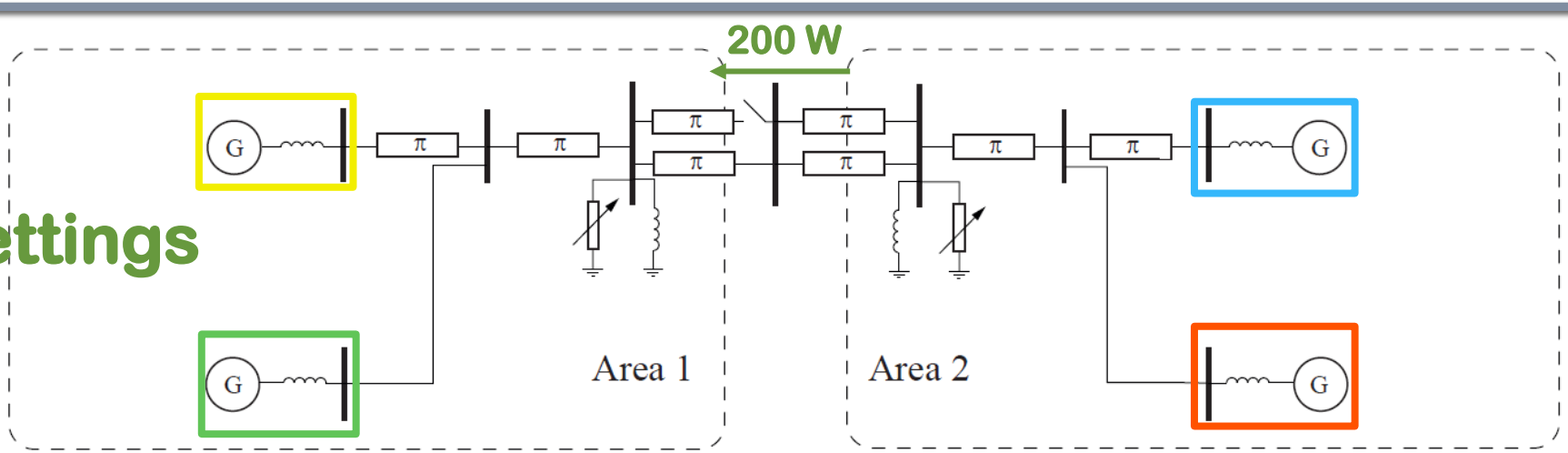

# Trip of a line

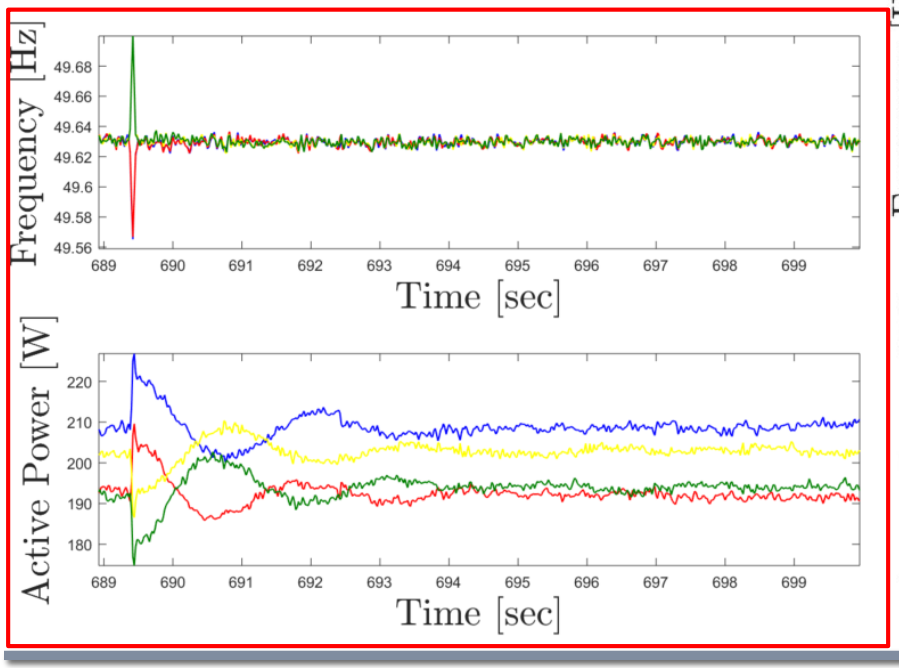


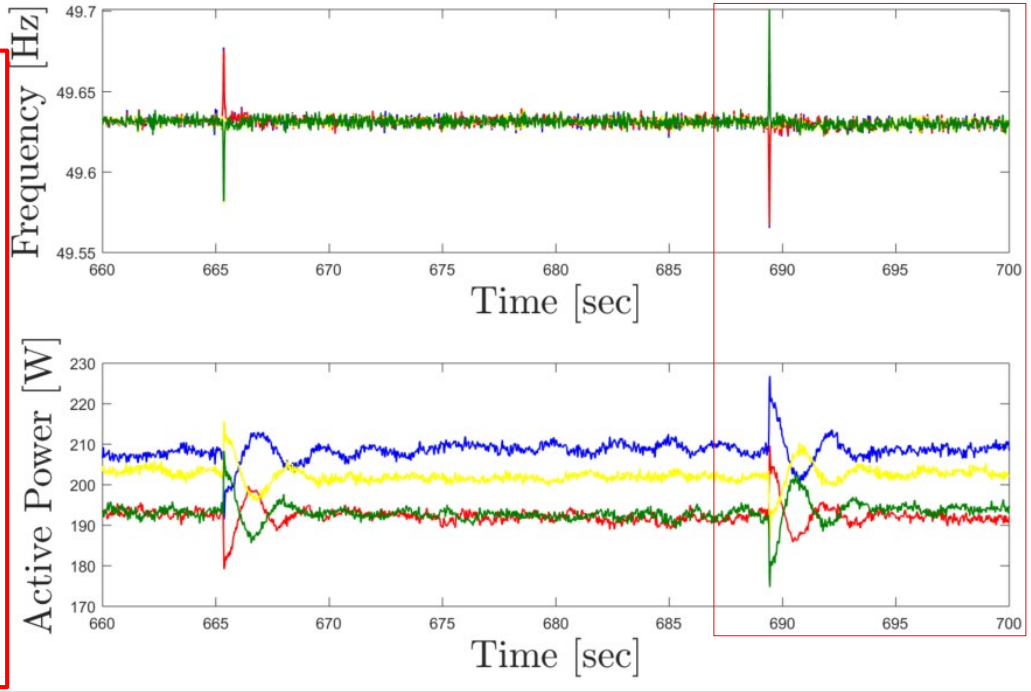


## Settings

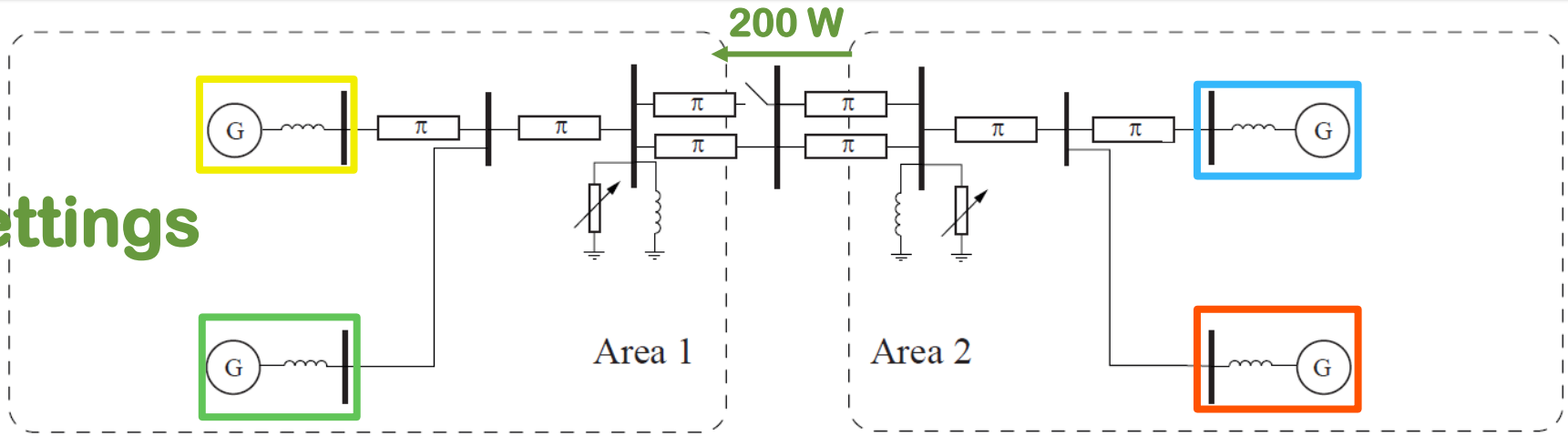

xdow@zhaw.ch

## PSS implementation

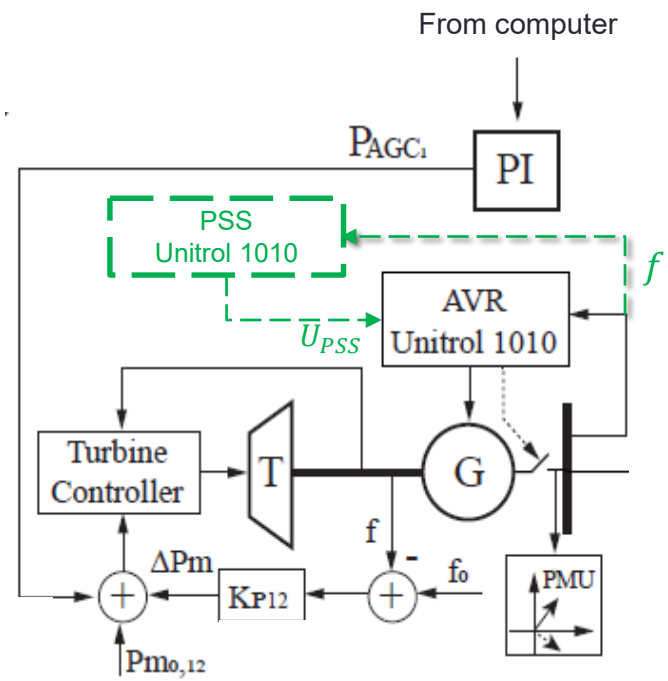


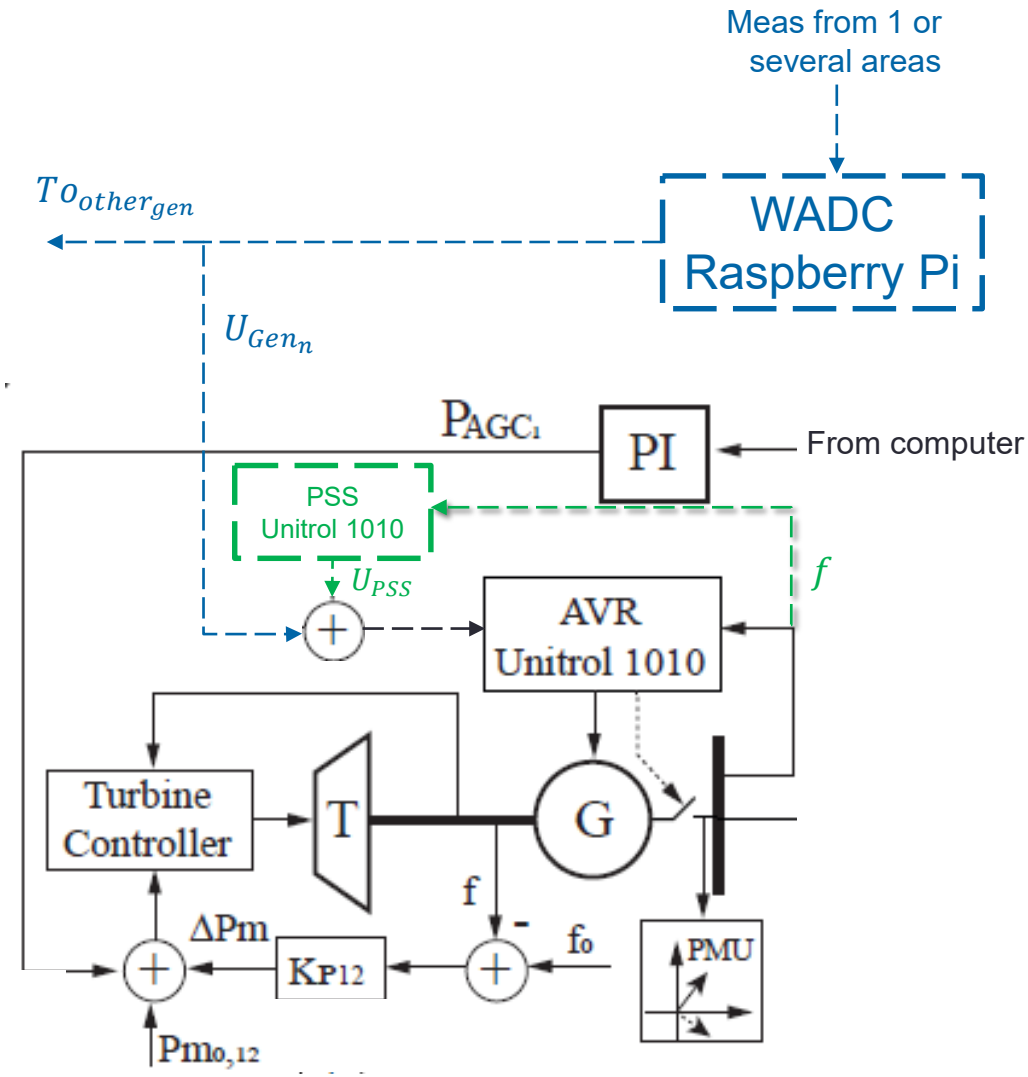


## WADC implementation

# Conclusion

- Implementation of Kundur's transmission grid model using Lucas Nüelle systems
  - Possibility to change inertia, to trip lines, to trip generators, to activate / deactivate secondary controllers…
  - Ability to represent inter-area oscillations as well as local oscillations

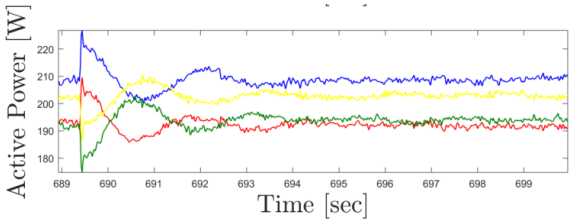


- Possibility to test some controllers already designed in simulation:
  - WADC approaches: "Centralized Wide Area Damping Controller for Power System Oscillation Problems" 2019 IEEE Milan PowerTech.
  - New PSS tuning: "Inter-area oscillation control based on eigensystem realization approach." 2018 IEEE International Autumn Meeting on Power, Electronics and Computing (ROPEC).
  - Feedback control: "State-feedback control for damping inter-area oscillations on electrical power systems." 2018 IEEE Autumn Meeting on Power, Electronics and Computing (ROPEC 2018)