ÉCOLE POLYTECHNIQUE
FÉDÉRALE DE LAUSANNE

Laboratoire
d'Automatique

"BABYFOOT"
RODS FINE CONTROL

FINAL REPORT

Semester Project Spring 2018

Pedro Andrés Pastrana Mejía

13/06/2018

Record of revisions

ISS/REV	Date	Modifications	Created/modified by
1/0	08/06/2018	Initial issue	Andres Pastrana
2/1	13/06/2018	Correction of misused word and basic diagram explaining the positioning strategy with LabVIEW.	Andres Pastrana

Executive summary

The researcher Christophe Salzmann heads a project in EPFL's Laboratoire d'Automatique developing a robot that can play foosball against humans and eventually against other robots, the project started in the fall of 2012 and it is developed by students every semester.

This report is focused on the rods fine control, the main objective of this semester's project was to make the functioning of the robot less aggressive, but with the same or even better efficiency. Another objective was to change the encoders measuring the angle position of the players to make this measurement more precise and avoid shifts in the bar during the game.

The new control for the displacement on the rods axis showed really good results, reducing vibrations in the table and making the functioning less aggressive in comparison with the previous rods control. The encoders were installed and tested without getting the expected results, due to time constrains the implementation of these encoders was left for further improvement in the future.

Acknowledgement

I would like to express my deepest appreciation and gratitude to Dr. Christophe Salzmann, whom was very important for achieving the results of this project and for giving me the opportunity of participating in it. I also want to thank to Norbert Crot for the advice at installing the encoders and the help for finding the needed parts in the lab.

Table of Contents

1. Introduction

This project demonstrates the capability of a robot to play foosball against humans and beat them, this because the "brain" of the babyfoot can compute more values and can consider more possibilities than what human brain does when playing. The robot is composed by linear and rotational motors with their respective encoders to control the position and rotation of the players, a camera to get the position of the ball, and other measurements from the opponent that are not being used for this version.

For the advances in this project, the file and set up used for the Drone Days in 2017 was the starting point, this, because it showed good results and the areas for improvements were clear. The main step was to change the positioning control of the rods from position to velocity or current control, with the aim of being able to decrease the speed when desired and help the robot to be less aggressive in the limits of the table. Next step was to fix the Goalkeeper angular position control because it was not kicking. The final step was to install the encoders and to make the needed modifications in the software to make them work.

This report presents first a quick introduction to the Xenus driver used to control the rods positioning, then a guide to the CME2 that sets the configuration for the Xenus, the new strategy used for controlling the position of the rods is presented, and finally the work done with the encoders is presented, with propositions for further improvements and conclusions included. Figure 1 shows the babyfoot table and the table with all the hardware used for its functioning.

Figure 1. Babyfoot with the whole system.

2. Xenus xtl-230-18-s

Xenus xtl-230-18-s is the amplifier driver used to control the linear motors of the babyfoot, it operates as a motion control device including several control modes, such as position, velocity or current, which can be controlled with an analog ±10 Vdc input, digital 50% pulse-width modulation (PWM) or PWM/polarity inputs.

When in the position mode, the Xenus does a complete motion index on command with S-curve acceleration and deceleration, with the stop speed and distance

programmable. When in velocity mode, the controller sends out a sequence of points each of which is an increment of a larger and more complex move, the drive uses cubic polynomial interpolation to connect the dots, such that the motor reaches each point at the specified velocity in a prescribed time. With the programmed velocity, the driver sets the output to a programmed motor velocity, if the programmed velocity is changed, the motor velocity will ramp to the new level at a programmed rate.

As for the positioning control, the Xenus was being controlled with analog position reference input, a new configuration will be set with the same type of input but for velocity control mode.

It is possible to obtain feedback with the position from the Xenus, thus, this will be used for the control of the rods positioning strategy.

Some important considerations on the Xenus driver are presented below:

- The Xenus drivers shouldn't be turned on when the computer is turned off, this because the Xenus receives a signal from the computer that enables and disables the linear motors when needed, if that signal is not there, the motors will enable themselves and start moving, this would damage the system. Copley Controls support team was contacted several times in the search of solving this issue, but they didn't reply with any solution on this part.
- When in velocity control mode, the Xenus will increase the current to reach the desired velocity, so if there's any obstacle, or the linear motor tries to go out of the table limits, overcurrent would be an issue, thus, it is important to set current limits in the CME2 and to prevent the linear motors from going out of the limits.
- The datasheet of the Xenus XTL-230-18-S can be find in Copley controls website by going into the support tab or by going to the following link: http://www.copleycontrols.com/wp-content/uploads/2018/02/Xenus_CANopen-XTL-Datasheet-Datasheet.pdf.
- Copley Controls support team can be reached by going to the following link: https://www.copleycontrols.com/contact-us/. Or by contacting directly to Crumlish, Dean, whom is the Sr. Applications Engineer with phone number: 781-828-8090 x266 and e-mail address: dcrumlish@copleycontrols.com.

Figure 2 shows the four Xenus drivers used to control the linear motors in the babyfoot.

Figure 2. The four Xenus driving the linear motors.

3. CME 2

CME 2 is a Java based software that sets the configuration for the Xenus driver, it includes auto tuning for the PI controllers with advanced oscilloscope tools. It has three control loops:

- Current loop
- Velocity loop
- Position loop

The CME 2 uses all three loops when in position mode, the position loop drives the velocity loop, which drives the current loop, when in velocity mode, the velocity loop drives the current loop, and when in current mode, the loop is driven directly by external or internal current commands. Figure 3 shows the typical system of the position mode.

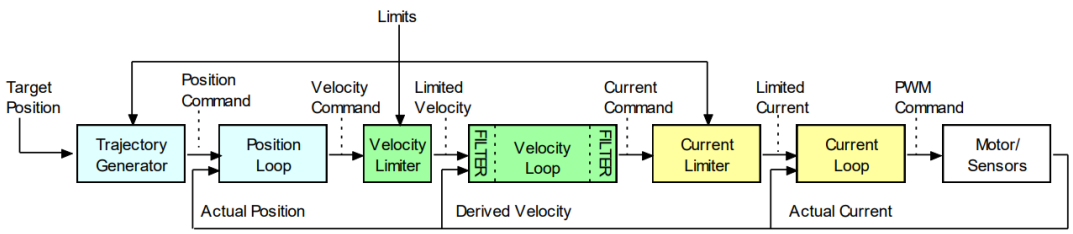

Figure 3. Typical System of CME 2 for position mode.
Taken from CME 2 Users Guide by Copley Controls (2014).

CME 2 user interface is intuitive but quick guides and suggestions for changing the operating mode, the gains for the control loops, and for setting the homing parameters and the sequences are presented below. When changing settings on the CME 2, it may disable the motor, thus, it is important to enable them again when exiting the software.

A. Setting the Operating Mode.

The first step is to open the CME 2 software and select the desired driver where the operating mode is going to be changed, it just necessary to click on it, Figure 4 shows this the screen that will be displayed in this step, it can be seen that the current operating mode is the position mode, to change it we have either to create a new operating mode or to open an existing one, this can be done by clicking on the disk with the arrow pointing to the left and then selecting the file that is going to be used, from Figure 5 it can be seen that the mode has hanged from position to velocity.

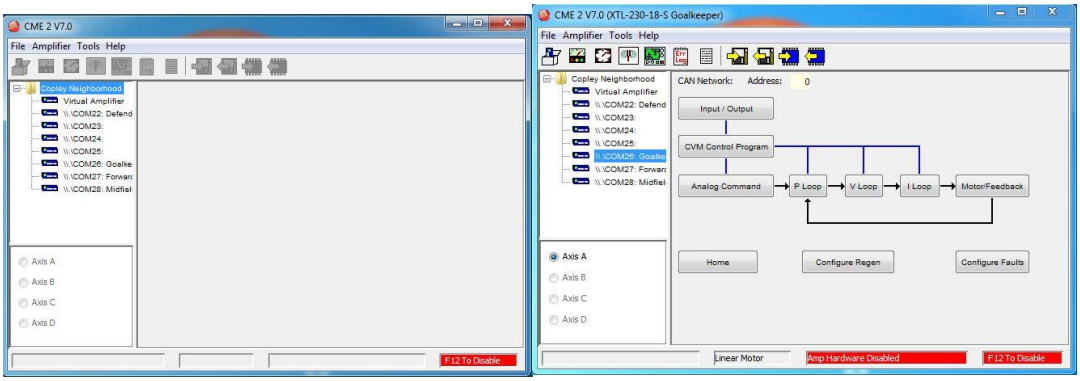

Figure 4. CME 2. Selecting the driver.

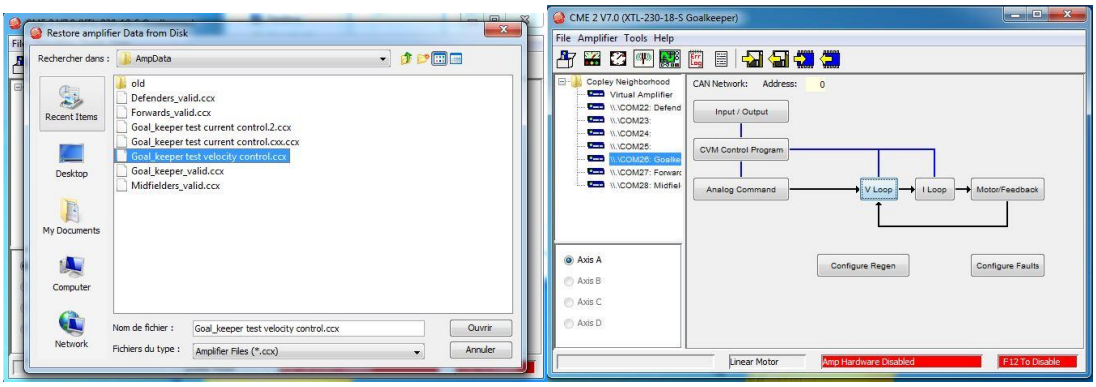

Figure 5. CME 2. Selecting existing file.

For creating a new operating mode, or changing its setup, it is necessary to click in the first button down "File" and then in change setting, then follow the step until the "Operating Mode Options" screen, there the operating mode can be changed as shown in Figure 6, by following the steps until finish, the new operating mode will be registered, then it is necessary to save it as a new file to not lose the older files that could be still useful.

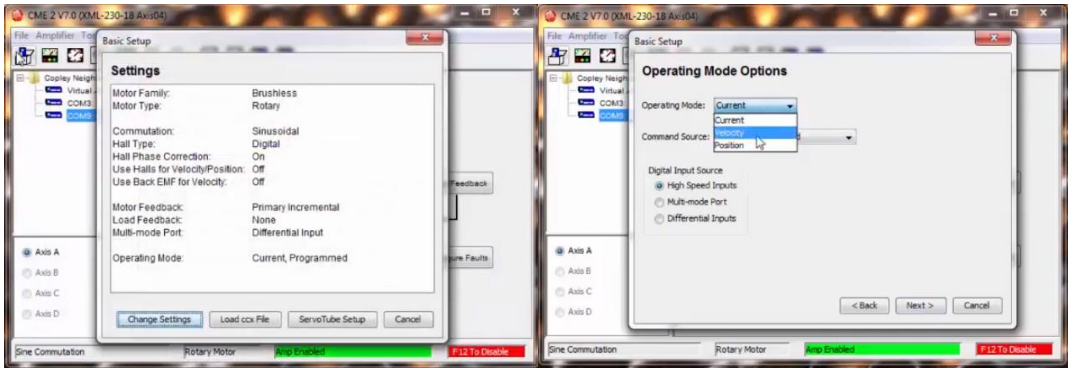

Figure 6. CME 2. Changing Operating Mode.

B. Control Loop Gains.

For setting the control loop gains it is necessary to go the "scope" and the to "Gains", CME 2 has a function generator for tuning the gains. Special attention must be paid on the settings for the function generator, this, for not reaching the system limits. As running the test, you will see the response on the motor graph, the gains can then be modified to match the ideal response with the one from the motors, make only small changes. Be aware that the ideal response curve will never be the same as the one from the motors. There is also the auto-tuning option but is not recommended as when it does the tuning for the current control loop gains it reaches the current limits.

Figure 7 shows an example of a good response, consider that this is just an example and the values shown in the figure are not similar to the ones for the babyfoot.

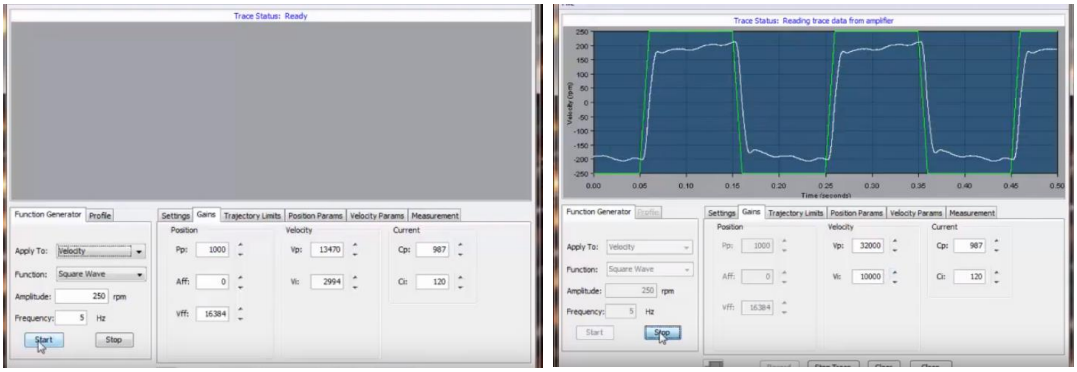

Figure 7. CME 2. Control Loop Gains Tuning.

The first test for hanging the positioning control to the velocity mode was performed with the goalkeeper, Figure 8 shows an example of the tuning of the parameters for the control loop of the velocity mode, and the VI used for testing the control with the velocity mode.

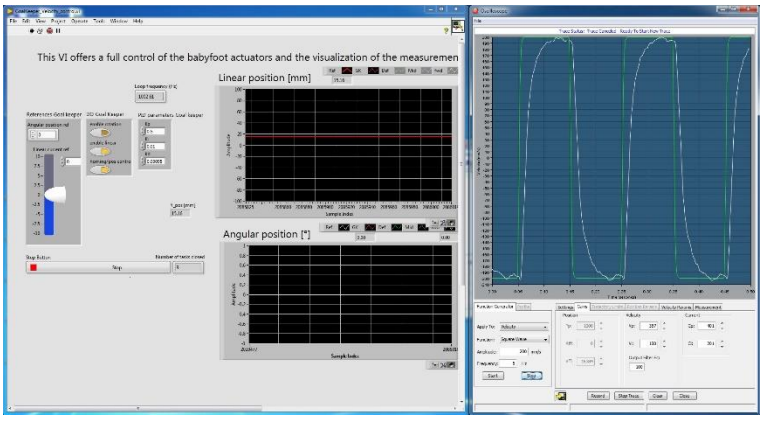

Figure 8. Vi for Testing velocity mode and tuning from CME 2.

C. Sequences.

The CME 2 allows to save sequences and execute them, this is useful for the babyfoot as in the start we need to know the position of the players and set a starting point. This is done by setting a sequence on each motor for doing first a homing and then for going to the desired mode, in the current version to the velocity mode.

The way to set the setting is by clicking in the "CVM Control Program" square shown in Figure 5, and the by selecting the desired sequence as shown in Figure 9 where the sequence is first the homing and the going to the velocity mode, here the scaling must be set for the analog input. Save the data to a new file and then to the flash of the Xenus.

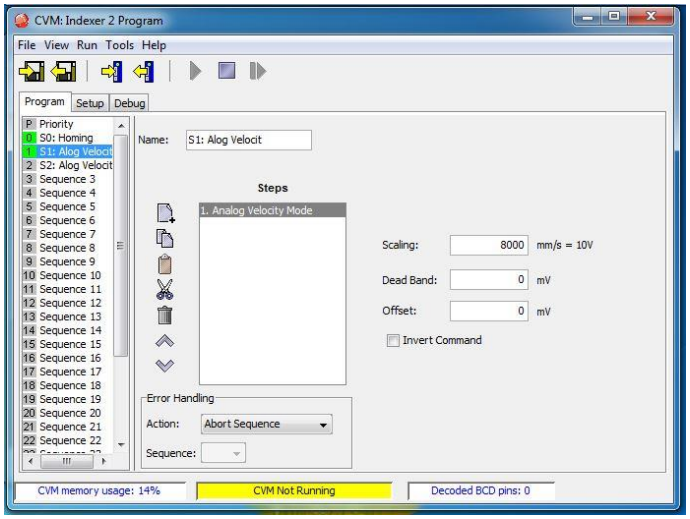

Figure 9. CME 2. Sequences.

D. Homing.

At the moment of setting the Homing in the CVM Control Program, the parameters for this homing must be set, which are the desired velocity for the movements, it's direction, and the final movement. The final movement will be the initial position for the babyfoot, thus, we want it to be right in the middle to make easier the strategy software. The middle point for each player (Goalkeeper, Defenders, Midfielders and Forwarders) is different, the middle point for each of them can be obtained by taking the maximum distance from the starting point in the control panel of the CME 2 which shows the actual motor position as shown in Figure 10.

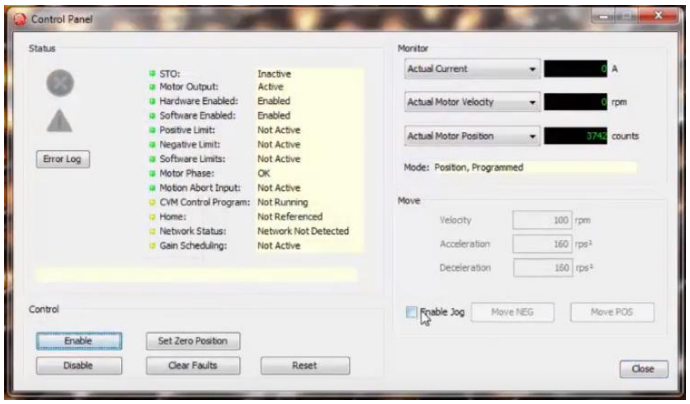

Figure 10. CME 2. Control Panel.

After homing, the motors will keep moving if they're not disabled, this happens because the Xenus doesn't manage to set an absolute zero velocity with the sinusoidal sign, the solution for this is disabling the motors just after homing, enabling them again once ready to start the game, this will be further explained in section 7.

CME 2 User Guide can be find in Copley controls website by going into the support tab or by going to the following link: http://www.copleycontrols.com/wp-content/uploads/2018/02/All-CME2_User_Guide-Manual.pdf

4. Position Strategy in LabVIEW

LabVIEW is a "National Instruments" systems engineering software for applications used for testing, measuring and controlling. It is the software used for controlling all aspects from the babyfoot.

By changing the babyfoot to the velocity mode, the whole strategy for controlling the position of the players had to be changed, for doing this, security factors were considered, such as not exceeding the limits of the table in terms of position and not exceeding the velocity and current limits. The idea for the new strategy is simple and its resumed in the following point:

- Follow the ball with the closest player, making shifts as the ball moves, making the closest player to always be in front of the ball.
- When the ball is in game (close the player) increase the velocity or use the maximum velocity.
- When the ball is not in game (far away from the players or out of the table) decrease velocity.
- As the ball gets closer to the players, increase velocity to ensure the players will reach the ball.
- If the ball is in front the player, or the difference is small, reduce velocity to the minimum or make it zero, this, to be able of controlling the ball and stop the system from shaking.

For the security factors the following points were applied to the strategy.

- Decrease velocity when getting lose to the limit of the table.
- Set a fictive limit close to the real limit, to have a security margin.
- If beyond the fictive limit, apply certain velocity to make the rods go back, with this we ensure that the linear motor will never go out of the limits.

A Sub VI was created in LabVIEW with the new strategy controlling the position of the players with velocity, the inputs for this Sub VI are the "x" and "y" position of the ball and the position of the players, the output is the reference for the velocity of the rods, it may go from -10 Volts to +10 Volts.

The following diagram shows the functioning of this strategy for the babyfoot, the system will react to any hanged as it is reading the inputs of ball position all the time.

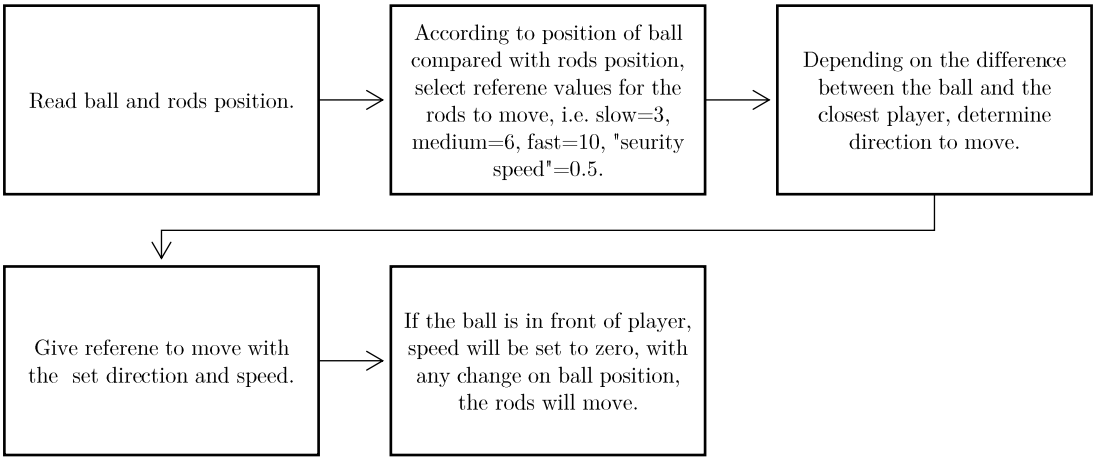

This strategy was divided in two parts, the first is for determining the velocity at which the players will move, Figure 11 shows this strategy in which the "x" position of the ball is analysed, this determines if the ball is far away or getting lose to the player, increasing and decreasing the velocity when desired, the most important condition here is applying the security speeds.

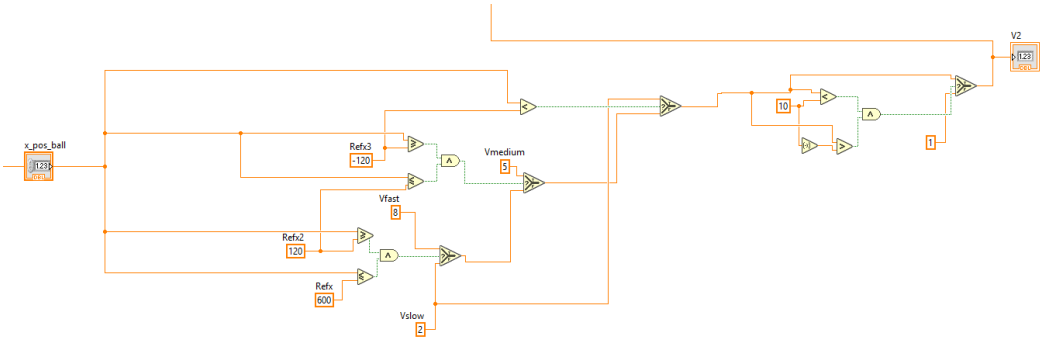

Figure 11. Setting velocity for the positioning strategy.

The second part of the strategy is shown in Figure 12, the most important condition for this is as well for the security factor, so that the rod never goes out of the limits. In this part the determined velocity is applied until positioning the player in front of the "y" position of the ball.

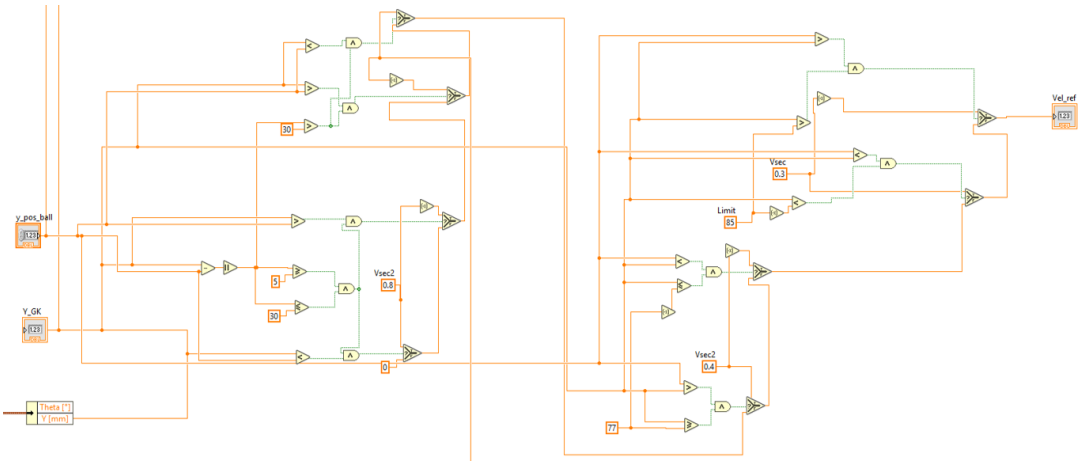

Figure 12. Positioning Strategy.

This strategy was tested first with the Goalkeeper, showing good results. The Goalkeeper was the simplest player for this setting the position in this strategy because it is only one player in the centre. The same Sub VI was used for the other players, but with some modifications, first to determine the difference between the "x" position of the players and the ball, with the purpose of setting the velocity, and then for making the closest player to be in front of the "y" position of the ball, this part was done by creating a fictive "y" position of the ball, shifting the real position by adding or subtracting "distance" according to the "y" position of the ball and the position of each player, so that the closest player positions in front of the ball, Figure 13 shows this characteristic for the midfielders, where there are five players, for the defenders and the forwarders the same solution was applied.

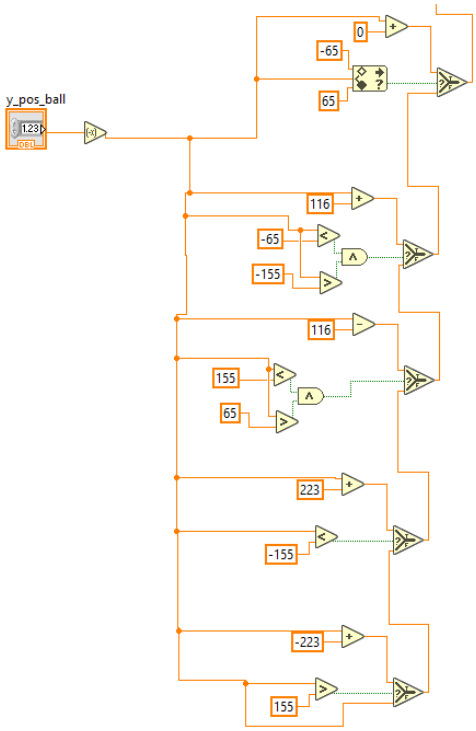

Figure 13. Shift of "y" ball position.

The strategy for the positioning of the rods is in the Sub VI for the strategy of the system, where the references for the angular position are given as well.

5. Encoders

The babyfoot has four motors with encoders included giving the feedback of the angular position for each rod, but there is a problem when the players kick the ball because the mechanical contact between the rod and the motor is not perfect, it has some shifting due to the applied force when kicking the ball, it works well but the rods need to be re-adjusted every certain time. This was the reason for the desire of implementing angular encoders to other part of the rods, to read the real angular position of the rod and not the one in the motor.

The angular encoders to implement to the system are form the "British Encoder Products Co." and the product type: 15-T-OC, the pulses per revolution are: 2048 and the serial number is: 17307932.

Two of the encoders were already installed, in the rods for the Goalkeeper and the defenders, first step was the connection of the encoders, for this part only the

goalkeeper was tested first, showing good results. The connection was implemented by replacing the one of the encoder form the motor with the new encoder, a servo controller for the maxon motor is being used, Figure 14 was taken from the Hardware Reference for the ESCON 50/5 Servo Controller made by Maxon Motors in 2015, it shows the input and output ports for the encoder from the ESCON controller and Figure 15 shows the ones from the encoder to be implemented.

3.3.4 Encoder (J4)

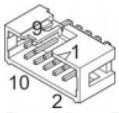

Figure 3-7 Encoder Socket J4

J4 Pin	Signal	Description
1	not connected	–
2	+5 VDC	Encoder supply voltage (+5 VDC; ≤70 mA)
3	GND	Ground
4	not connected	–
5	Channel A\	Channel A complement
6	Channel A	Channel A
7	Channel B\	Channel B complement
8	Channel B	Channel B
9	not connected	–
10	not connected	–

Figure 14. Table for encoder signals on the ESCON Servo Controller.
Taken from "ESCON 50/5 Servo Controller P/N 409510 Hardware Reference" by Maxon Motor (2015)

Figure 15. Signals from encoder to be implemented.

After the implementation and during the testing, a difference was detected in the degrees from the encoder, instead of 360 degrees, like the encoder from the motor the new encoder was giving 90 degrees, this was corrected by software turning those 90

degrees into 360, each degree would represent four degrees from the old encoders, this worked fine because the babyfoot doesn't need that much precision.

The rod from the goalkeeper was tested then with the new encoder, showing good results and going to the indicated position, if any force was applied to the player shifting its angle, the encoder would make the motor to come back to the previously indicated position, showing that the implementation of the new encoders would solve the aforementioned problem.

With these conclusions, the missing two encoders were installed on the babyfoot for the rods of the midfielders and the forwarders, the same procedure was applied for the connections and testing, showing similar results.

Once all the encoders were implemented on the system, the strategy was fixed for the new encoders, without showing the expected results. The motors would move to the indicated position, but not always in the same direction, with the encoders from the motors this problem was never shown. This is a big problem because at the moment of kicking or moving the angular position of the players, they would hit the ball to any direction without consistency, this resulted in several own goals, reducing the competitivity of the babyfoot.

It was decided to bring back the babyfoot to the previous version without using the new encoders, and to keep working on their implementation on the side.

The next trial was to connect the encoders directly to the DAQ and creating a new channel to replace the one from the other encoders, this couldn't be implemented because when creating the new channel errors were displayed by LabVIEW, such as invalid camera session, requesting multiple virtual channels corresponding to the same physical channel and some others related to the IMAQ. Using the example in LabVIEW for the encoders, the ones on the goalkeeper were tested separately from the babyfoot system, the encoder from the maxon motor worked well showing the angular position of the player, then the connection was changed using the same ports for the new encoder, without showing good results, the encoder wasn't measuring the angle, it could be due to a problem with the Voltage source for the new encoders (the encoders form the maxon motors are getting the power directly from the ESCON controller). Connecting the encoder in new ports wasn't achieved because the DAQ has the wrong serial number and the input and output ports are not the same as in the datasheet. Tests trying to solve this were applied with Dr. Salzmann without getting any good result, more time will have to be implanted for solving this problem but the solution may be in finding the right input and output ports for connecting

the encoders, it must be considered that the DAQ has several counters, and by connecting the encoders in the ports corresponding to those counters the reading of the encoder signal would be easier and thus, the implementation of the new encoders in the babyfoot system would be successful just by reading the new measurement of the angle.

6. Forum FORWARD

The babyfoot was exhibited in the FORWARD "Forum de l'Innovation pour les PMW" at the SwissTech Convention Center the 19th of April, entertaining the attendants and showing the project and the way the babyfoot works. Several points from this exhibition are presented below:

- Goalkeeper not kicking: This problem was solved in the future days by checking the connection of the encoder and the strategy on the code.
- The first trials the positioning control was done by position, the system showed aggressivity on the movements and a lot of shaking in the table.
- For the second round, the babyfoot position control was changed to a velocity mode, making this the first time the four rods were controlled at the same time in this mode and shown to other people. It showed really good results making softer most of the movements and even increasing the effectiveness of the babyfoot.
- This was the first time the babyfoot started experiencing problems with the camera, after some hours of playing it displayed an error and the system had to be restarted or at least the camera to solve the problem and being able to play again. This problem continued happening during the whole forum.
- After several hours of functioning, the coupling of the rod from the defenders with the rotational motor showed problems, being completely lose. This was solved while implementing the encoders, by modifying the contact area of the coupling to the correct one.
- The angular position of all rods had to be fixed after certain functioning time.

Figure 16 shows the babyfoot at the SwissTech Convention Center.

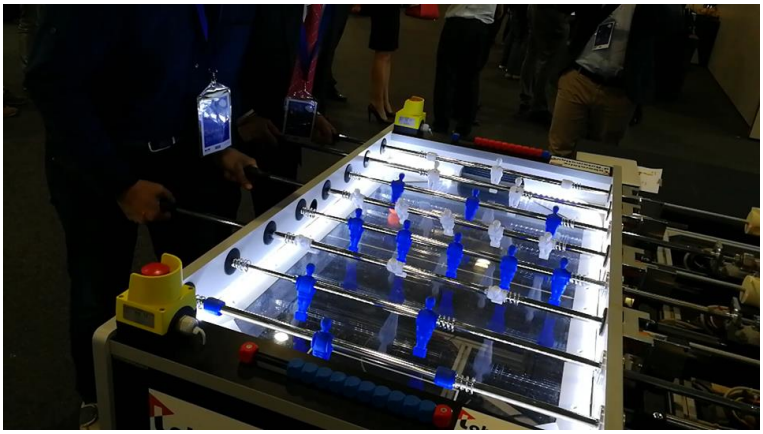

Figure 16. Babyfoot at the FORWARD Forum at the SwissTeh Convention enter.

7. Current version of the babyfoot

In this section small changes applied in the babyfoot interface from the one used in the Drone Days 2017 are presented.

The instructions for starting the game are different, with the aim of making the setup faster and to help the homing to be exactly where we want it changes were applied to the waiting time for the homing, disabling the motors right after finishing the homing, the players must be already in the vertical position, the instructions displayed in the software are listed below:

1. Place the blue players vertically, and at initial position.
2. In order to find their max paths, the rods will move, do not block them.
3. You will be asked to do the vision calibration and then the game will start.
4. You can click on "Go" now.

Figure 17 shows the starting position of the players. They must be in a vertical position and align to the red line shown in the picture. It is of high importance to pay attention to the starting position, if the players are in a different position when starting the homing, at the end they may not be in the desired starting point and the zero would be different, increasing the risk of the motors going out of the limits, this because they could finish the homing before and create an offset in the position.

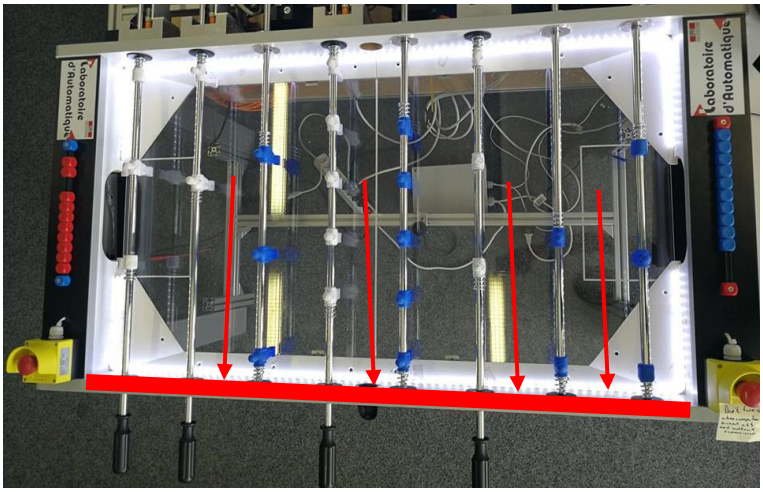

Figure 17. Starting position for the babyfoot rods.

After the homing, the visual calibration will have to be made, the current parameters are working fine so there is no need for changes, the only need is to find the ball and indicate it to the software. When the vision calibration is completed, the game will start automatically.

The current version of the babyfoot works with the velocity mode and with the encoders from the maxon motors on all rods.

8. Further work and improvements

Take another look at the CME 2 User Guide especially to page 28, this, trying to find the way to set the position limits for the motors and decrease any risk.

Try to ramp the velocities in the velocity mode, right now is just changing the velocity, but an idea is to ramp the velocity to position the player in front of the ball just when it arrives.

Find the correct ports for the DAQ counters to be able to implement the encoders and test it just by hanging the signal of the encoders from the maxon motors to the new signal.

Find a better way for kicking avoiding own goals, which just happens with the goalkeeper as is not often.

Use the opponent measurements for creating a better strategy, while defending and while attacking, make the system differentiate between these two.

Find a way to stop the ball and controlling it, an example is passing it to the player on the side several times and then kick.

Analyse the problems with camera to find if there's the need to change it or find the solution for the problem.

Fix the connection of the maxon rotary motor with the ESCON driver for the midfielders, the cable is not long enough, and it is caused the connection to break, it was fixed as in Figure 18, but the connection will have to be fixed to ensure its durability and good functioning.

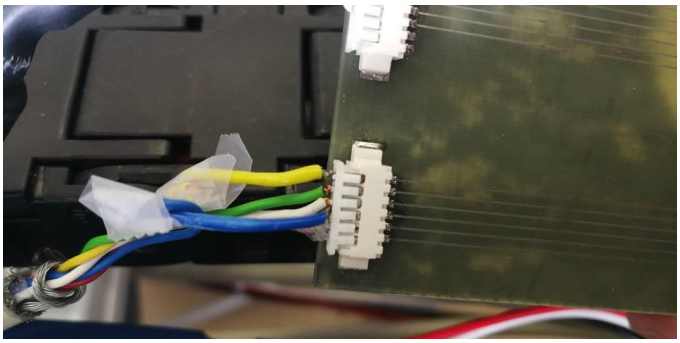

Figure 18. Connection between maxon motor and ESCON driver for the Midfielders.

9. Conclusion

The main goal of this project was to change the positioning control of the rods in the babyfoot form position to velocity, this goal was successfully achieved showing good results, if the initial position is the correct one, there is no risk for the motors to go out of the table, but still a current limit should be apply or indicate the limits of the table into the xenus, Copley Controls didn't reply on this aspect but there must be a way if the xenus is capable of doing the homing, knowing the limits of the system.

The babyfoot moves in a softer less aggressive way but the effectiveness is still good, this decreases the risk of damaging the table and the system with aggressive moves.

The second goal of the project was to implement and use the encoder reading the angular position directly from the rods. This one was partially achieved, all the encoders are installed but they're not implemented with the system yet, it seems that the solution is close as explained in section 5 but due to time constraints this will have to be implemented in the future.

The babyfoot has a lot of potential, it is already working quite well, when playing with an average person it will never lose, and with the implementation of the encoders the possibilities for making it work better will be a lot, also by using the measurements from the opponent the system could be smarter and compute a lot of possibilities deciding which is the best, it will be able to analyse more possibilities than what the human does when playing.

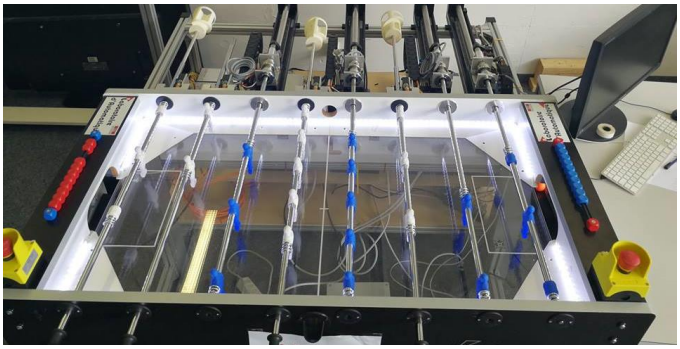

Figure 19. Babyfoot.

References

AUTOMATIC CONTROL LABORATORY. (2018). *AUTOMATIC CONTROL LABORATORY.* Retrieved from Babyfoot: https://la.epfl.ch/page-142255-en.html

Copley Controls. (2014). *CME 2 User Guide.* Massachusetts: Copley Controls.

Copley Controls. (2017). *Xenus XTL datasheet.* Massachusetts: Copley Controls.

Copley Controls. (2018). *Copley Controls.* Retrieved from https://www.copleycontrols.com/

Maxon Motors. (2015). *ESCON 50/5 Servo Controller P/N 409510.* Sahseln: Maxon Motors.

National Instruments. (2018). *National Instruments.* Retrieved from Discussion Forums: https://forums.ni.com/t5/Discussion-Forums/ct-p/discussion-forums

List of figures

Contact information

Andrés Pastrana

E-mail : pedro.pastranamejia@epfl.ch
andy.pastrana@gmail.com
andy.pastrana@hotmail.com
A01361223@itesm.mx

Phone : +52 1 722 39 98 064
+41 77 982 2765

Social media : https://www.facebook.com/andy.pastrana
https://www.instagram.com/andypastrana/