Automatic Foosball

Concurrent engineering project

Eliott Guenat, Cyril Picard, Ricardo Serigado and Baptiste Ulrich

December 21st 2012

Supervisor: Christophe Salzmann

Assistants: Milan Korda and Georgios Stathopoulos

ABSTRACT

The project follows a simple idea: how can we automate the movement of an axis on a foosball and match human performances.

Table of Contents

INTRODUCTION 1

SCOPE STATEMENT 1

OBJECTIVE 1

SKILLS TO ACHIEVE 1

BRIEF SUMMARY OF EXISTING WORK 2

HUMAN PERFORMANCE ASSESSMENT 2

MECHANICAL CONCEPTION 3

MOTION SOLUTIONS 3

PART DESIGN 7

MOTORS SELECTION 9

TIMING BELT SIZING 12

STRUCTURE DESIGN 13

AUTOMATIC PART 15

MOTOR CONTROLLERS 15

POWER SUPPLY 17

ELECTRONIC DESIGN 17

LABVIEW – CONTROLLER DESIGN 19

SYSTEM IDENTIFICATION 20

PERFORMANCE ASSESSMENTS 21

POSSIBLE IMPROVEMENTS 23

CONCLUSION 24

ACKNOWLEDGEMENT 24

BIBLIOGRAPHY 25

APPENDIX I

I. MATERIAL FOR THE MECHANISM I

II. MATERIAL FOR THE STRUCTURE I

III. MOTORS DATASHEET II

IV. MOBILE MASS IN TRANSLATION (BASED ON CATALOGS AND CATIA MODELS) III

V. WIRING TABLE IV

VI. ESCON 50/5 CONFIGURATION VI

VII. ASSEMBLY GUIDE VIII

VIII. QUICK LAUNCH GUIDE XVI

Introduction

Once again, humans will try to imitate humans. As many robotic applications, the human behavior is reproduced by an automatic system. This time, the purpose is not to make a walking robot or a mechanical hand, but to make a system playing foosball, replacing a human player. Because, as many students know, playing foosball for hours is a very uncomfortable task and, as any other heavy labor, it is subject to be automatized.

The idea is to replace a human player by a system able to sense the position of the ball on the foosball, to evaluate a strategy to score and to command the bar of the foosball to execute this strategy. The goal of this present project is to create this last mechanical part. Other students will develop the program sensing the ball and computing the strategy during the next semesters.

From the measurements of human performances to the pure mechanical dimensions, we tried to establish precise data, needed for the conception. The final goal is to provide the automatic laboratory with a concrete, effective and functioning system on both software and hardware parts.

The force of this project is that it requires mechanical, electrical and electronic conception, LabView programming and regulator implementation. It offers a large range of different challenges and problems to solve. This is an opportunity to improve our skills in all these subjects and to realize a complete and real multi-disciplinary project.

Scope statement

Objective

The goal of this project is to develop an actuator for an axis of a foosball.

Skills to achieve

- Power a bar of a standard foosball in rotation and translation.
- Be easily mountable on any standard the foosball.
- Position the bar correctly according the two coordinates (one position in rotation and a position in translation) given by an external system (human or algorithm). The command interface has to be “user-friendly”.
- Match human speed performances in both translation and rotation.
- Reach the maximal amplitude for the selected bar in translation.
- Be able to make a full turn in rotation.
- Perform a translation and a rotation motion simultaneously and independently.
- Be non-destructive for the structure of the foosball.

- The width of the system must not be greater than the distance between the bars of the foosball (15 cm in standard). This requirement guarantees that the mechanism can be installed on every bar.
- The system must be robust and long-lasting.
- In order to prevent damages due to software failure, the system must have a sensor that shuts down the command of the translation when the bar reaches its edge.

Brief summary of existing work

Other laboratories in the world have already created solutions for this task. Many of these can be seen in action on video-sharing websites. Their main goal is the design of the game analysis system and the actuators are only a small part of those projects. Nevertheless, we were able to make a first evaluation of the challenges we would have to face.

In most of them, if the software seems effective, their mechanisms lack speed and acceleration. The human players dealing with the machine obviously do not play at full capacity. Furthermore, the installations are very heavy and often definitively attached to the foosball.

A good example though is the project developed at the FH Köln (Allied Vision Technologies; FH Köln). It clearly shows the potential to create a good automatic opponent to any human player. As can be seen on their video (FH Köln) the performances of the system are pretty impressive. It also shows that a sophisticated installation is required. They used two motors per axis and the translation was done using a timing-belt.

Human performance assessment

A key aspect of our project is to match human performance. Knowing the human performance is therefore a prerequisite for the selection of the motors. With the help of a 180 fps camera, we recorded ourselves while playing on a foosball. We identified two time-critical actions: changing the position of the player axis and shooting.

For each of these movements, we identified the key events. The movement of the player axis is about getting to a certain point in a minimum amount of time with a maximum of precision. The speed and acceleration are here not really relevant. For the shooting, we settled for the ball speed as the key performance for a great shoot. We also decided to fix a time requirement for the shoot to be performed, although this might be very player-dependent and not reflect the actual movement of our mechanism.

After viewing the films, we were able to assess the values of the shoot speed and the movement time. Concerning the shoot speed, we evaluated the speed reached by the ball after the contact and for the movement we assessed the time to make a limit translation, i.e. for the longest run feasible on the foosball.

With the main values estimated, we can establish a constraints table to respect: Table 1.

Translation		Rotation	
Longest translation	370 [mm]	Speed of the ball after a shoot	4.5 [m/s]
Duration of the longest translation	200 [ms]	Duration of a shoot (180°)	50 [ms]
Precision	3 [mm]		

Table 1: Human performances

Mechanical conception

Motion solutions

To allow the mechanism to translate and rotate an axis of the foosball, many options exist and are examined in this section in order to find the ones that would best fit our scope statement. The approached solutions are listed below, from the less effective to the chosen one. The solutions for the translation and the rotation motions are separated.

The general idea is to have a static support plate on which a mobile part, called the carriage, glides on a linear guide. The bar of the foosball is attached to this carriage to provide the translation motion. The rotation motion is provided by a motor, which is either moving with the carriage or fixed to the support plate.

Translation motion

Pneumatic activation

The first pneumatic solution that was studied consists in a single double effect piston in opposition with a spring to allow the system to move backward nearly as fast as forward. The piston would push and pull the carriage attached on a linear guide with the command of a pneumatic activator, including a compressor. The strength and acceleration of the piston depends on the position of the shaft, because of the design of such systems. The spring would be used to compensate this effect. While being compressed in the forward motion, it would reduce the apparent strength of the piston and restitute this strength to the system while being slaked in the backward motion (Figure 1).

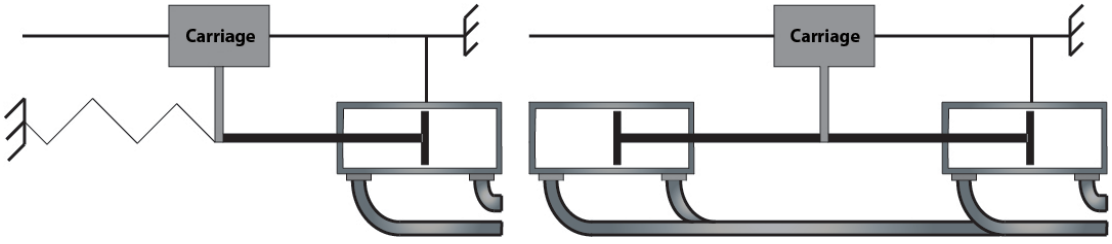

Figure 1: One piston and two pistons solution illustration

A similar solution is to have two single effect pistons working in opposition. In this case, the acceleration would be the same for the forward and backward motions, without having more pneumatic complication, the two pistons being this time single effect.

These solutions have many disadvantages compared to the following ones. First, it is very difficult to control precisely the motion of the bar, since it is difficult to guarantee the pressure in the pistons. Second, the control of the motion would be complicated by the lack of rigidity of the system, since air is much more compressible than oil. Third, the required equipment to power the pistons is heavy and complicated. It would consist of a compressor that would work at a nearly constant rhythm and a compressed air tank between the compressor and the controllers. For all these reasons, the use of a pneumatic circuit was not selected.

Linear motor

Linear motors exist in a large range of size and power and are employed in many applications, from the automatic material transportation to the machine tool powering. Linear motors can be extremely precise, even on long motions. Their speed and acceleration are very impressive and would totally satisfy our performance needs in this domain, even with “small” motors. Furthermore, it would remove the need for a linear guide, since the motor is a linear guide itself. The mechanism holding the axis of the foosball would directly take place on the motor moving on its rail.

The biggest disadvantage of the linear motor is its price, much higher than the average price of high quality radial motors of the same scale. All the models consulted from the catalog of ETEL, leader in the fabrication of precise linear motors, were beyond 5000 CHF. In addition, the precision guaranteed by the linear motor is absolutely not required for our project. It is clear that the linear motorization is uselessly sophisticated for our use and is rejected.

Ball screw

Ball screws are employed in systems requiring both power transmission and precision. They are for example usually employed in machine tools. This system can also allow fast motion, since the step of the screw can be chosen quite long. An electric motor powers the system through the screw or the nut, but it is way more efficient to power the nut, mainly because of the inertia of the screw due to its material (steel) and length. This is the principal issue with this system since the motor has to move with the system to power the nut. It makes that, in both cases, the inertia of the ball-screw is high and the motorization must be dimensioned accordingly to this constraint.

Even if the price of the ball screw is already sensibly lower than a linear motor of similar scale, it is still high. Finally, it would be difficult to ensure the concentricity between the screw attached to the structure of the foosball and the nut on which the system depends.

Rack and pinion

The rack and pinion solution was approached in two different versions. The first one is to fix a radial motor on the moving carriage where the axis of the foosball is

attached and to assembly a pinion on the shaft of the motor. This gear would roll one a rack solidly fixed to the structure of the foosball, allowing the transformation of the rotation of the motor into linear translation. In such a configuration, the weight of the motor has to be added to the mass of the moving parts, causing a lack of acceleration at equal torque. The diameter of the pinion is significant in the choice of the motor, since the necessary torque to apply is inversely proportional to it. In first approximation, the smaller is the better. But in this configuration, the size cannot be set as small as wanted, because of the external diameter of the motor, which can not be smaller than the pinion to avoid contact with the rack.

The second version is the inverse of the first one. It consists of attaching the rack on the carriage while the motor and the gear are static, linked to the structure. Considering that the motor is heavier than the rack, this version needs less torque from the motor at equal acceleration, since the motor itself is not in translation. Meanwhile another difficulty appears, the rigidity of the track. If it is too flexible, the transmission of the strength will not be optimum and some slipping might occur. The length of the rack is also a challenge, since it must be as long as the range of the carriage and the motor powering the translation cannot be placed very near to the foosball, where it would minimize the moment of force due to its weight. The whole design of the system would have to deal with such a long carriage, but this is an acceptable difficulty compared to the constraints of other solutions.

Both versions have the potential to run as fast as required in the scope statement, with an acceptable and fitted precision. A huge range of racks and gears exists, in many materials (steel, aluminum, synthetic matters). Since the rack and pinion system is very common, the availability and flexibility in design are high and the average price stays very acceptable.

Thank to its performances, its price and its feasibility, this second version of the solution was in direct competition with the last following solution.

Timing belt

A way to have a static and effectively placed radial motor while having a precise, affordable and efficient power transmission is the solution using a timing belt attached to the carriage on one point between two pulleys. Comparing to flat or vee belts, timing belt is a positive transmission and cannot slip if the tension is correctly set. This kind of belt does not depend on the speed to allow the transmission of high power, which means that it accepts relatively high strength. The belt only transmits the power of the motor to the carriage and the axis of the foosball without guiding it. This point is the role of the linear rolling guide, which supports the weight of the system and guarantees the trajectory of the carriage.

This solution also exists in two similar versions, where only the orientation of the belt and the motor differs. One of these options is to place the axis of the motor and the belt horizontally. The other option is naturally the vertical one. The only convincing argument to choose between the two options is the space use. According to the scope statement, the use of horizontal space is strictly restricted, while greater vertical dimensions are allowed. Knowing that the motors susceptible to be used are longer than large, the vertical option is more adapted.

The advantages of the timing belt solution are many. As much as it is true for the track pinion solution, the use of a belt is flexible, affordable and highly feasible. The offer is very large in the choice of pulleys and timing belt and both the length and the width of the belt can be independently chosen. The diameter of the pulleys, which determines the nominal torque needed from the motor, can be freely chosen almost as small as wanted without other restriction than the offer of pulleys and the compatibility between components.

One of the disadvantages of this option is the tension of the belt that has to be calculated and set before to allow the transmission of the power. This pre-tension has to be realized by a specific device included in the mechanism and it is important to make sure this will not radially overload the shaft of the motor on which one of the pulleys is fixed.

Despite this disadvantage, this solution was chosen to power the mechanism.

Rotation Motion

Here are exposed the ideas approached to provide the rotation motion to the axis of the foosball. Ideally, the heaviest part, the motor, would have to be static from the point of view of the structure, in order to lighten the carriage and reduce the requested torque from the translation motor.

Static motor.

In order to minimize the weight of the carriage, this solution uses a motor fixed to the support plate providing the carriage with torque. The transmission between the motor and the carriage is ensured by a long shaft with two or three small wheels on its extremity. These wheels can roll inside a long pipe directly linked with the axis of the foosball. While the pipe, which is a part of the carriage, is moving in translation, this motion is not transmitted to the wheeled shaft. But as soon as the motor is activated, the rotation is transmitted from the shaft to the pipe through the wheels, which are activated with a blocked degree of freedom (Figure 2). The risk of such a torque transmission is to slide because of the non-positivity of the contact between the wheels and the pipe. To reduce this risk, the coefficient of friction between the surfaces and the normal constraint on the wheels must be both maximized. There are no difficulties in choosing a material with high adherence for tires wheels, but applying a pre-constraint on the wheels is more complicated. Another solution to reduce the risk of slipping is to use a right-angled grooved parallelepiped instead of the pipe, allowing the wheels to be blocked in their groove in case of slipping. But the fabrication of such a piece is more complicated than a simple pipe.

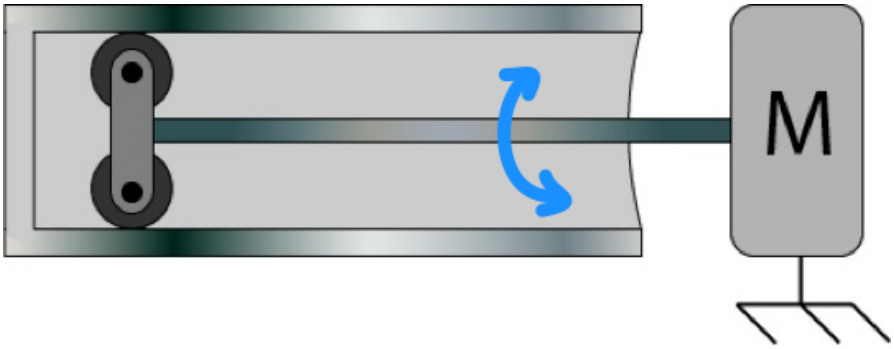

Figure 2: Solution with a static rotation motor

In both cases, the pipe and the shaft have to be quite long to allow the complete translation of the carriage. The gain of weight caused by a static motor is partly lost with the augmentation of the length of these parts, in particular the pipe, which moves in translation. With a range for the carriage of approximately 37 centimeters, the advantage is not certain and this solution may even increase the total weight of the carriage and the torque needed from the rotation motor.

In conclusion, for reasons of feasibility and the uncertain advantages offered by this solution, an option with a mobile motor was approached and developed.

Mobile motor.

Much simpler than the previous option, having the rotation motor on the carriage allows to directly link the bar to the shaft of the motor. As said before, having a static motor for the rotation is not necessarily an advantage. In this new configuration, the linear acceleration can be transmitted from the carriage to the bar through the rotation motor, causing an axial constraint on its shaft. Due to potentially high acceleration, this transmission has to be avoided in order to protect the motor. The strength comes to the bar through a ball bearing linking the bar to the carriage and transmitting only the axial effort.

The internal ring of the bearing is assembled with a special piece that holds the axis of the foosball with screws. Ideally, this piece would directly hold the handle of the axis, in order to be as universal as possible. At the other extremity of this piece, the shaft of the rotation motor is held with a screw on the plane of the shaft. This direct link is allowed because of the possibility to add a speed reducer directly on the shaft without notable external difference for the final user. The external ring of the bearing and the rotation motor are linked to the main part of the carriage, itself depending on the linear guide and the timing belt. This solution was selected because of its feasibility and its advantages.

Part design

Our mechanism is composed of two parts, rotation and translation. The different parts of the foosball actuator are[1]:

- Two pulleys
- One Belt
- One clamp for the belt
- One tightener and his plate
- Two steel axis
- The “U”
- Slide and his skate
- Carriage
- Cloche
- Handle system

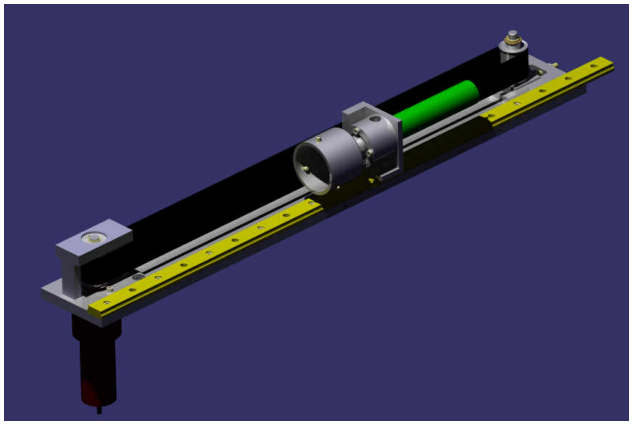

Figure 3: Foosball actuator

[1] All plans and ordered materials are in appendix

- Two ball bearings
- Cylindrical ring
- Support plate

From these two subsystems, we designed the mechanism to link the translation and the rotation with the central piece, the support plate.

Part translation

The pulleys and the belt have to be chosen based on the strength that has to be transmitted. We finally chose a timing belt design, being the best solution from the point of view of robust tightening system because it provides good gripping and avoids problems when reversing the direction of the movement.

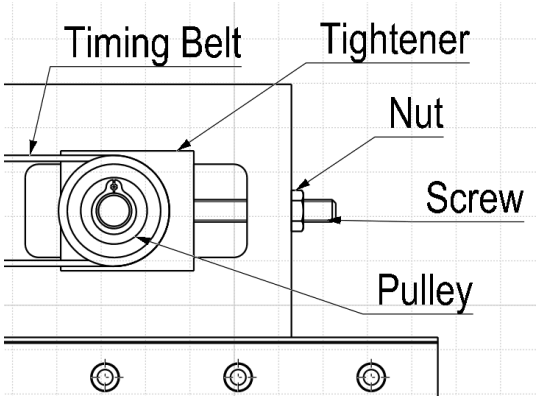

Figure 4: Belt pre-tensioning system

The problem with this kind of system is the tension on the timing belt. We have designed a system that allow to preload the belt in order to ensure the translation is fluid and without sputter. This is the function of the tightener that use a screw and a nut to adjust manually the tension even after the actuator is assembled. This tightener and its plate are located at the end of the support plate, on the pulley without the motor (Figure 4).

Two steel axis, one on each pulley, assume partially or totally the radial strength on the pulleys. The pulley of the tightener is fully supported by the shaft and two plain bearings help the pulley to slide on it. We used to have a problem with the bending on the second pulley because only the shaft of the motor supported the radial stress on this pulley. It was uncertain if the motor could actually endure this stress on its shaft for a long time period and during many cycles. In the worst case, this situation could destroy the system because of an excessive moment of force. To avoid such a catastrophic situation, we designed a piece that we named “U” (Figure 5) which only serves to support a part of these through the second steel shaft in the pulley. We have also included a ball bearing in the “U” to keep the concentricity of the shaft.

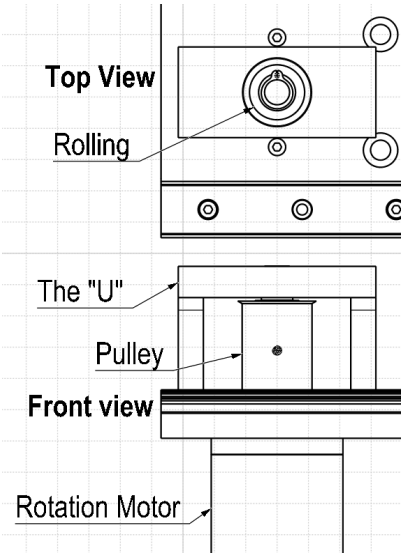

Figure 5: the "U" and its ball bearing

Then we placed all this pieces on a portion of the support plate and we kept the other to install a gliding track, which would allow us to execute the translation of the foosball. This piece has been chosen with a skate, which allows rapid and abrupt movements of our system. It has required us to design a new piece that would become the most important part of the actuator.

The carriage attaches the skate, the rotation motor, the timing belt and the bar of the foosball together. The skate and the motor are fixed on this part with screws and the timing belt is attached with a clamp.

Part rotation

The carriage plays a central role (Figure 6, Figure 7). It links the translation and rotation systems together. The bar of the foosball is attached to the carriage using a special component that holds the handle with three screws. The advantage of this handle system is to work for a large range of foosball handle, but the concentricity between the bar and the piece is difficult to set. On the other side of this piece, the shaft of the motor is held with a screw on its plane to transmit rotation movements. Because the axial accelerations of the carriage exceed the axial stress resistance of the motor shaft, a ball bearing on the handle system with much more axial resistance transmits the axial forces from the carriage to the bar without passing through the motor. The internal ring of this bearing is tightly set around the handle piece and is secured with a circlip in order to prevent axial movements. The external ring is contained in a support named “Cloche”, itself attached to the carriage, with a precise adjustment between the ring and the internal surface of the Cloche. To maintain the ball bearing in the Cloche, a circular ring is screwed in it and pushes the external ring against the bottom.

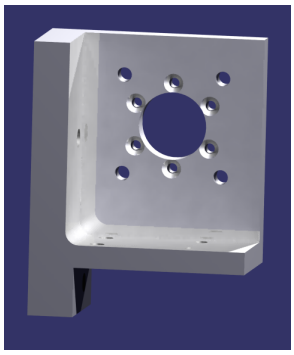

Figure 6: the carriage

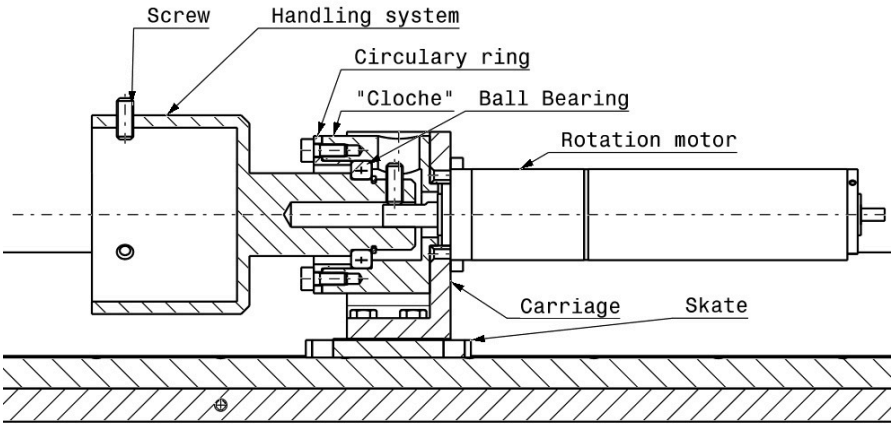

Figure 7: Rotation system

Motors selection

Based on the previously collected values, we can now establish the specification of the two motors included in our mechanism. The first one for the rotation and the second one devoted to the translation. So, we have to distinguish the selection of the two motors.

Rotation

The first motor, i.e. the one used for the translation, has to give the ball a higher speed than 4.5 [m/s]. We can determine the rotation speed of the player on the bar by an energy balance.

$$E_r = \frac{1}{2} \cdot J_{sys} \cdot \omega_f^2$$

$$E_t = \frac{1}{2} \cdot m_{ball} \cdot v_{ball}^2$$

Where:

- E_r is the rotational kinetic energy of the bar
- E_t is the translational kinetic energy of the ball
- J_{sys} is the moment of inertia of our system bar-players ($2.71 \cdot 10^{-4}\ kg \cdot m^2$)
- ω_f is the rotational speed of the system bar-players. It's the requested value.
- m_{ball} is the mass of the ball (≈ 3 grams)
- v_{ball} is the speed we want to give to the ball (4.5 m/s)

Assuming that the collision is elastic and the frictions are negligible, we can apply the law of energy conservation. We can equalize $E_r = E_t$ to obtain ω_f. After computing, we find $\omega_f = 52.6\, rad/s$. This value represents the minimal rotational speed needed to give a speed of 4.5 m/s to the ball during a shoot. Now we need to choose a model in order to determine the torque.

We are constrained by a maximal rotation of $\Delta\theta$=π, because the player doing the movement must stay into a lower semicircle. Considering that the contact between the ball and the player is done when this last one is near the vertical, i.e. in an interval $\theta \in \left[-\frac{\pi}{12}; \frac{\pi}{12}\right]$ with θ null at the vertical, we can decompose the system into three stages:

- Acceleration between $\theta \in \left[-\frac{\pi}{2}; -\frac{\pi}{12}\right]$
- Steady speed between $\theta \in \left[-\frac{\pi}{12}; \frac{\pi}{12}\right]$
- Deceleration between $\theta \in \left[\frac{\pi}{12}; \frac{\pi}{2}\right]$.

The maximal rotational speed (ω_0) is reached during the second stage. With this model, even if the impact doesn't occur at the vertical position, the energy stays the same.

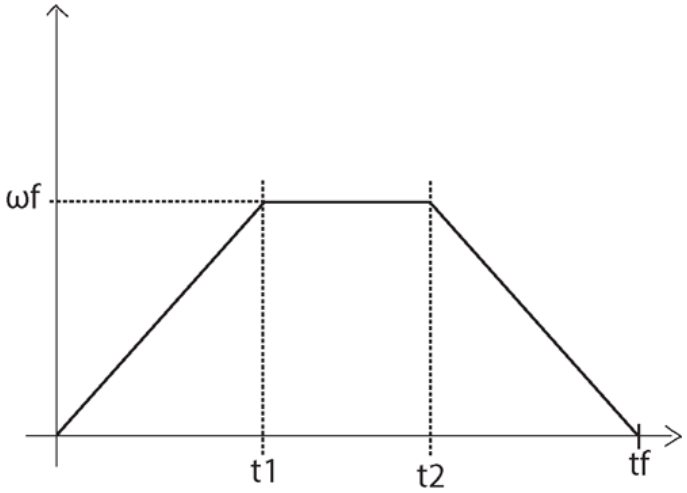

Given that t_f is known from the table 1, calculations give us:

$t_1 = \frac{5}{132}[s]$ $t_2 = \frac{1}{22}[s]$ $\omega_0 = 22\pi\ [rad/s]$

We can now estimate the torque the motor has to provide (C_{rot}):

$$C_{rot} = J_{sys} \cdot \frac{\omega_0}{t_1} = 0.494\ [N \cdot m]$$

Translation

Concerning the translation, the optimization is done on the movement time. The goal is to reach a specific point in a minimum amount of time. In order to choose the right size of the motor, we mainly need to determine the maximal speed we'll have to reach, as well as the maximal torque to give.

The maximal speed is reached during the longest movement, which in our case is the 370 mm movement. If we suppose that the acceleration is done on half the distance, while the other half is used to slow down in order to reach the target point with zero speed, it is easy to calculate the translation speed required to do the distance as fast as a human, i.e. less than 0.2 seconds.

$V_{moy} = \frac{\Delta d}{\Delta t} = \frac{d_{max}}{t_{max}}$ where $\Delta d = \frac{d_{max}}{2}$ is the distance run during the time $\Delta t = \frac{t_{max}}{2}$.

Considering the worst case, i.e. with a constant acceleration, the maximal speed is worth:

$V_{max} = 2 \cdot V_{moy} = 3.5\ [m/s]$

The constant acceleration needed to reach the maximal speed would then be:

$$a_{const} = \frac{4 \cdot d_{max}}{{t_{max}}^2} = 35\ [m/s^2]$$

In reality, the acceleration of the motor isn't constant and is much higher than the previously calculated acceleration. Therefore, if our motor can reach the maximal speed above, it will allow a movement at least as fast as a human movement.

We need now to translate this linear speed into a rotational speed (ω) to the output of the motor, which is done easily by dividing the translation speed by the primitive radius (R_p) of our pulley. We can also calculate the rotational acceleration (α) with the same method.

$\omega = \frac{V_{max}}{R_p} = 3.14 \cdot 10^2\ [rad/s]$

$\alpha = \frac{a_{const}}{R_p} = 3.14 \cdot 10^3\ [rad/s^2]$

We still have to determine the required torque (C_{tr}), which is done below, with M_{tot} = 1.580 [kg] the mass of the translated system, $J_{poulie} = 5 \cdot 10^{-6}[kg \cdot m^2]$ the moment of inertia of a pulley and $\eta = 0.9$ the yield.

$J = 2 \cdot J_{poulie} + M_{tot} \cdot R_p^2 = 2.06 \cdot 10^{-4}\ [kg \cdot m^2]$

$$C_{tr} = \frac{J \cdot \alpha}{\eta} = 0.720\ [N \cdot m]$$

Summary

	Translation	Rotation
Maximum speed at gear output [rpm]	3000	660
Maximum torque at gear output [mNm]	720	494

Table 2: Summary of the working points of our motors

With all this information, we can use the *Maxon selection program* to choose the motor for the rotation. It is an online tool that helps with the motor selection process. It gave us a list of possible combinations. We took the EC 4-Pole 120W. This was the lightest motor suggested.

For the translation, this online tool didn't find any combination, so we used an iterative process to find one that fits. The selected motor is the EC 4-Pole 200 W.

The motors are described in appendix III.

Timing Belt sizing

Now that we know the exact weight of the moving mechanical part (appendix p. iii), we can proceed with the selection of the correct timing belt and its corresponding pulleys.

Our space requirements made us choose the smallest pulley available in the Optibelt catalog (Z=14) and a relatively small step for the belt (5 mm). There are several tooth designs available for this step and we decided to take the AT5 step, which is the reinforced version of the very common T5. Based on those considerations, we need to calculate the width of the belt and the required pretension. We used the tables and formulas provided by forbo-siegling (Forbo-Siegling). Even though our belt is not from the same constructor, we assume that because we take the same standard, their specifications should not vary significantly. We will also be taking into account a security margin. The idea of those formulas is to establish a normalized effective pull, which we can then locate on a graph to identify the possible width.

The details of these calculations are summarized in Table 3 and Figure 8.

Effective pull	$F_U = 82N$ with a 1.5 security factor	
Maximum effective pull	$F_{U\max} = F_U \cdot (c_2 + c_3) = 164N$	$c_2 = 2$ $c_3 = 0$
Specific effective pull required	$F'_{Ureq} = \frac{F_{U\max}}{c_1} = 23.4N$	$c_1 = \frac{Z}{2} = 7$ (for $i = 1$)
Pre-tensioning force	$F_v \geq 0.5F_{U\max} = 82N$	

Table 3: Timing Belt sizing

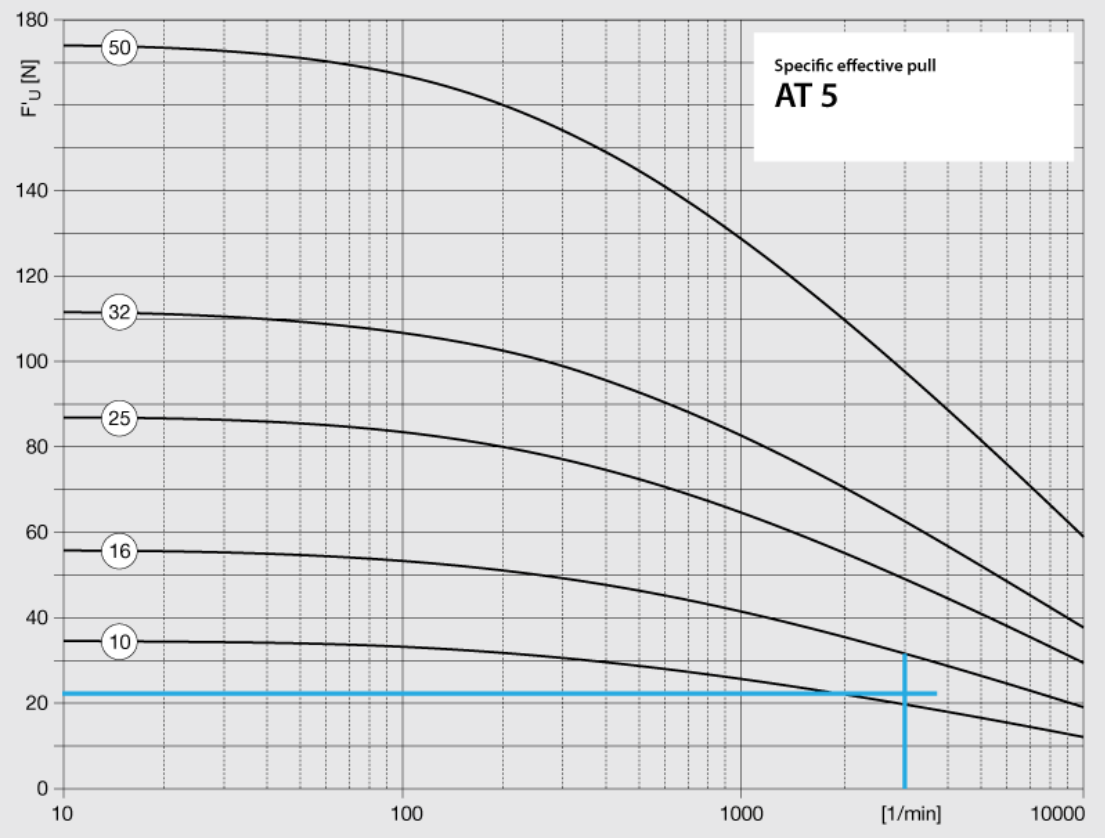

Figure 8: Working point represented on a selection chart (Forbo-Siegling)

Based on the selection chart, we have decided to take a 25mm belt.

Structure design

The last mechanical part still missing is the structure that links your system to the foosball itself. Two very different ways of solving this problem were examined.

The first one involves placing the mechanism on a table of three or four feet standing on the floor. The table has two levels, one on top where the mechanism is solidly attached and one below where the electronic and electric components are placed. Obviously, the table must not be larger than 15 centimeters, in order to fit the demands of the scope statement.

To guarantee the concentricity between the axis of the foosball and the rotation motor, particularly along the vertical axis, each foot has a screw underneath to adjust the height and the angle of the table. It must also be firmly linked to the foosball to ensure a constant distance between the two structures. An easy way would be to screw it directly to the foosball, but this solution does not perfectly fit the scope statement, which specifies that the system must not cause damage on the foosball. A way that is non-destructive for the table of the foosball is to use a clamp to link the two parts, but this would imply restriction on the geometry of the foosball: an empty space under it must exist to allow the clamp to hold the structure. In other words, the lateral surfaces have to be vertically longer then the underside of the foosball.

This solution is robust, very adaptable and the height can be relatively precisely set. It offers an ergonomic structure, since the heavy and bulky electronic and electric

devices can be directly placed under the mechanism. The biggest and most determinant disadvantage of the table solution is that any movement or tilting of the foosball, which is cinematically forbidden by the table, would impose dramatically high flexion constraint in crucial components such as the shaft of the rotation motor and would certainly result in the destruction of some parts. Even if the weight of the foosball is around 70 kilograms, it is usual to see very enthusiast players lifting their bars and the entire structure with them. Even if players might be pleased to be respectful with the material, this risk cannot be afforded.

The second solution consists of a structure completely independent of the floor and assembled only with the foosball. The weight of the precedent was transmitted to the floor with three or four feet but this solution depends entirely on the foosball. Here again, the bound between the new structure and the foosball is made with clamps, ideally four, to ensure the solidarity between the two parts. An empty space underside is still needed, as well as a space upside, which is usual on tables of standard foosball, but not on public games, which have a large plexiglas cover over the “field”. To guarantee the stability of the system, the lateral faces of the foosball must be as smooth as possible, without roughness or irregularities on it. In order to reduce the added weight supported by the foosball (which may be high with a full actuator on each bar), the electronic and electrical components, linked to the mechanism by flexible wires, stand on a separate table on the floor under the structure, with no other links than these cables. This is actually a hybrid solution that stands on both foosball and floor to support its weight. This solution would allow unexpected and violent movement of the foosball without damaging the mechanism or the structure. We agreed on developing this second solution of this particular advantage, despite the added complexity in setting the height.

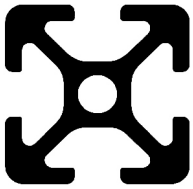

Figure 9: the cut of an ITEM profile

On the advice of M. Jeanneret of the SGM workshop, the conception of the structure was made using components of the German company ITEM. This company produces a large range of aluminum profiles and assembly devices specially designed to fit with their profiles. It also provides the customers with a good catalog and online conception tools.

The chosen geometry for the structure consists of two pairs of perpendicular bars of profile “5” (section of 20x20, Figure 9, two vertical bars and two horizontal bars), linked by a pair of transversal bars to deduce the flexion. The horizontal bars lay directly on the lateral table of the foosball and our mechanism is attached to the structure with four screws. The concentricity between the system and the bar must be adjusted manually and iteratively.

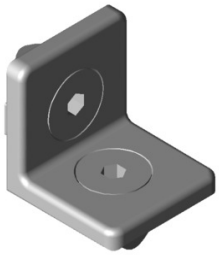

Figure 11: Aluminum square

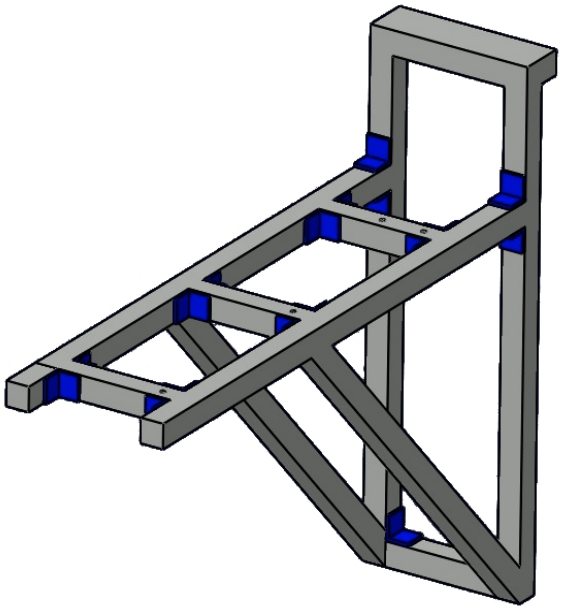

Figure 12: CAD view of the designed structure

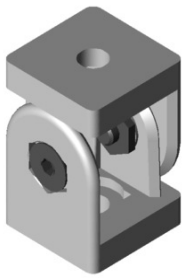

Figure 10: Articulation

In order to reduce as much as possible the amount of work for the workshop, the assembly components were chosen in function of the degree of machining needed to assembly these pieces to the profile bars. The two selected components are 18 aluminum squares (blue parts of Figure 12, corresponding to Figure 11) and four angle articulations (Figure 10). Only four threading for the articulations are needed on the transversal bars (one on each extremity, in the central hole of the profile.

Once the structure was installed on the foosball, the rigidity was surprisingly high, even laterally on the extremity of the horizontal bars. The flexion inducted by the weight of the mechanism is negligible in our use. As expected, the concentricity between the axis of the foosball and the handle of the mechanism is difficult to set and requires patience. Even if it seems acceptable at eyesight and at low angular speed, small defaults are amplified at high rotation speed and impose constraint on the mechanism and its structure. When the mechanism is rotating fast on the extremity of its support, an oscillating bending of the structure is notable. In order to prevent damages on the system, this situation should be avoided. However, a continuous high-speed rotation is not supposed to occur during a normal foosball game.

Automatic part

Motor controllers

To fulfill our weight/power requirements, the Maxon motor selection process suggested us to use EC motors. EC stands for electronically commuted and is another way of calling brushless DC motors. Those motors require some sort of logic board to perform the commutation between the three windings on the stator based on the position of the rotor. This is usually done using the hall sensor feedbacks. The electronic requirements are well explained in the figure below:

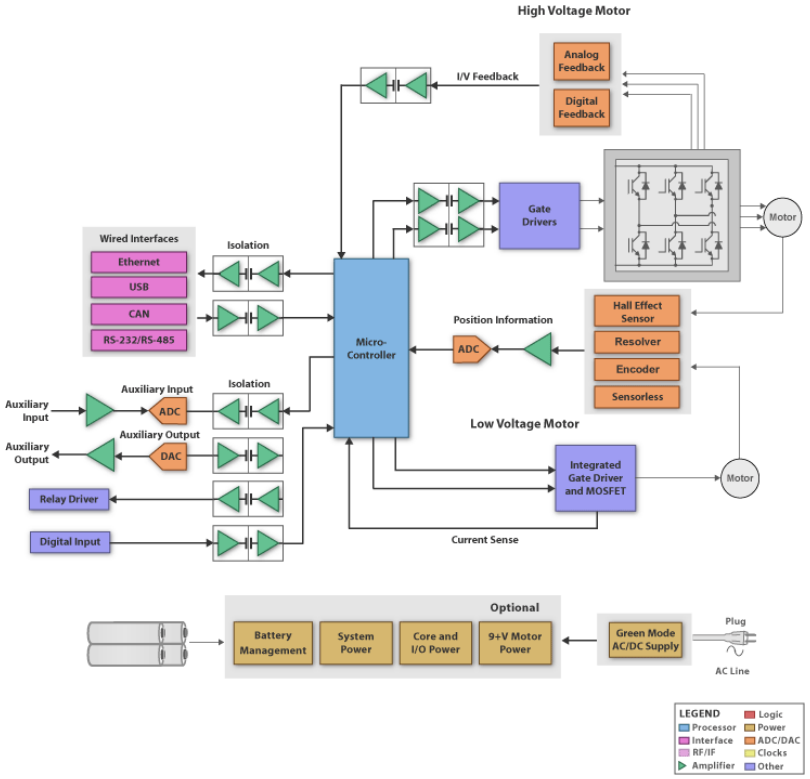

Figure 13: Block diagram of the electronic to control a brushless motor (Texas Instruments)

We considered basically two approaches: we could either use separate components and assemble them ourselves or use a fully designed controller made by maxon motor.

The first option is very flexible and would allow use to design the circuit to exactly meet our needs. This approach is also very cost efficient. A possible way of doing this would be to use a Texas Instrument three phase PWM[2] motor driver (DRV8332), which is a full-bridge with its required drivers. We could connect this chip through an acquisition card to a computer and do the commutation using LabView. Due to a lack of time and knowledge (programming a microprocessor for instance), and after having discussed the issue with our assistants, we set this solution aside.

Using Maxon motor controllers is very convenient. They are designed for people who don't want to care about how it is done, but just want their motors to work. They have a wide variety of controllers, each one preconfigured for specific tasks, and they are well designed to work with their own motors. As the goal of this project implied some sort of controller design, we decided to take the flexible ESCON 50/5 controller. Using a USB cable, one can easily configure the integrated regulator (current-control, speed regulator, speed control) and the different inputs, outputs of it. They are also the cheapest.

We configured those devices in speed control mode. The absolute speed value is set through an analog input and the direction (CW or CCW) is set through a digital port. In order two start the motors, the ESCON expect an *Enable* digital port to be active (high in our case). The *Enable* channel is also used to clear any error on the raising edge. We also configured a *Brake* digital port that stops the motors as long as it is

[2] PWM : Pulse width modulation

active. This is used with our security system (see p. 18). Their full configuration can be seen in appendix VI page vi.

Power supply

With the controller and the most extreme operating points of the motors being known, we can know calculate the minimum required power supply. For this, we're using Equation 1 with the information from the datasheet (appendix III). This equation already takes into account a 98% effectiveness and the maximum voltage drop in the controller (1V).

Equation 1: Minimum required power supply

$$V_{cc\min} = \left[\frac{U_N}{n_o}\cdot\left(n+\frac{\Delta n}{\Delta M}\cdot M\right)\cdot\frac{1}{0.98}\right]+1$$

U_N nominal voltage
n_o nominal no-load speed
$\frac{\Delta n}{\Delta M}$ speed/torque gradient
n, M operation speed, torque

Rotation motor	Translation motor
$V_{cc} = 23.9\ V$	$V_{cc} = 31.1\ V$

We took a Kepco power supply that was available in the lab powering up to 40 V and 12 A. With those specifications, we can connect both motors in parallel on the same unit.

Electronic design

Each motor is connected to one ESCON device following the instructions from the manufacturer (the color code for the cable is noted on the motors themselves). The power supply is then linked in parallel to the two ESCONs. The link with the computer is performed through a SCB-68 board from National Instruments. Each ESCON is connected to two digital ports (Enable, CCW), an analog input (speed value) and an analog output (speed command) on this board (details in appendix V page iv).

We adapted a second encoder cable in parallel on each encoder and connected them to the counter 0 and counter 1 input on the board.

The general electronic scheme is display on Figure 14.

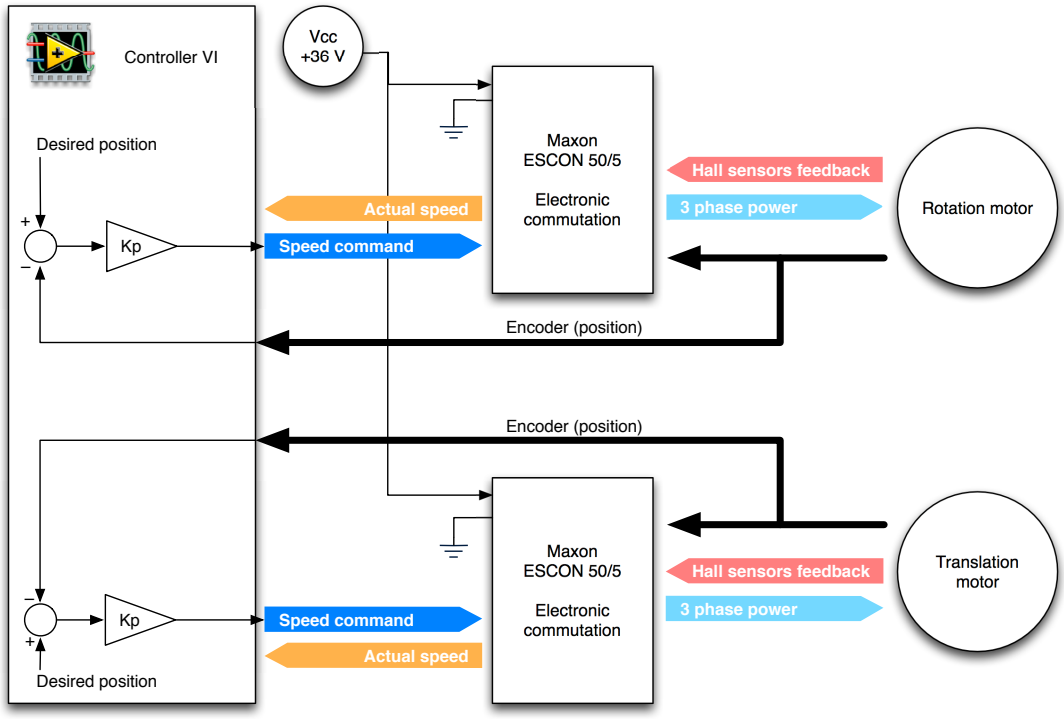

Figure 14: General wiring scheme and control process

Translation security

When our mechanism is connected to an axis of a foosball, we can take advantage of the springs at the edge of this axis to stop the translation motion in case something goes wrong with the controller. We added a supplementary security in case the handle disassembles from the axis or if the mechanism is used without a foosball.

The idea is to use an optical sensor to detect some limits placed on the timing belt that will then generate a digital high. It is then connected to the *Brake* port of the ESCON of the translation motor. The electrical scheme of the security is shown on Figure 15. It was realized on a piece of PCB and mounted on the structure. The limits on the belt are placed manually.

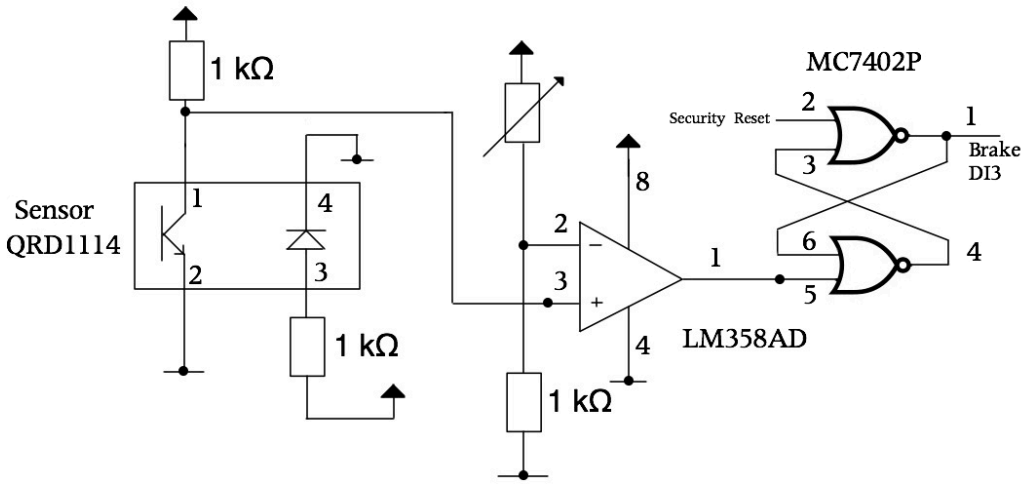

Figure 15: Electrical scheme of the security system

The security system was removed, because it was not working as expected. Apparently, the NOR gates might not be correctly connected. As long as the axis of the foosball is connected to the system, the springs at the edge of it provide some mechanical security.

LabView – Controller design

Our LabView project contains one main VI, which is *Controller*, and six subVI : *InitDAQTask, GearCorrection, RotationController, TranlsationController, OutputCorrection and StopDAQTask*. It is using the *DAQMXBase* toolkit to perform the data acquisition from an M Series PCI card by Nation Instruments.

In the main VI, the user has the option to specify which lines and ports are used for each task. For the digital i/o channel, all required digital lines are connected on the same port and the user can set the index of the line connected to the corresponding digital channel of the ESCON controller, the initial T standing for translation motor and R for rotation motor. When multiple lines are opened on the same task (analog inputs and outputs), the controller assumes the information from the rotation motor is contained in the first element.

On startup, the main VI first calls the *InitDAQTaks* VI, which opens and starts all tasks based on the specified channels. The analog inputs and outputs are synchronized on the hardware clock (RTSI0) of the acquisition card with the selected rate. The counter channels are configured to ignore the Z index, to use the X4 acquisition mode and the units are set to radians for the translation motor and degrees for the rotation motor.

With all tasks being ready, the VI enters the main while loop. It starts by reading the inputs (speed value and position) and they are converted in the *GearCorrection* VI to take into account the gears placed on the motors. For the translation position, the angular position is multiplied by the primitive radius of the pulley to obtain the position in millimeters. Before entering the controller part itself, the motors are enabled or disabled based on the graphical Boolean selectors.

In the controller part, the system first tries to identify the extreme positions of the translation mechanism by slowly activating the motor and waiting until the position returned by the encoder stops evolving. When this is done, the controller part generates the speed command. There are three modes available: sine signal, square signal and proportional controller. The proportional controllers are implemented in the *RotationController* and *TranlsationController* VI and the value is set through the desired position selectors.

The command value is then processed by the *OutputCorrection* to comply with the ESCON box. It returns the absolute value with a saturation at 10V of the command and based on the initial sign sets the CCW boolean. The information is then written to the corresponding channel. The loop the waits for the next clock signal to restart.

By click on the stop button or if an error occurs, the loop stops and the VI calls the *StopDAQTask* VI, which disables both motors and cleans the tasks.

The software assumes that the players are in vertical (face up) position when started (to get a correct 0 position).

System identification

Using our LabView VI, we generate and recorded the response to a step impulse on both the rotation and the translation system. The speed and the position response are displayed, but it is important to remember that the ESCON calculates the speed device based on the information from the encoder. We also applied a 2nd order Butterworth filter to the speed data to remove some noise.

Translation system

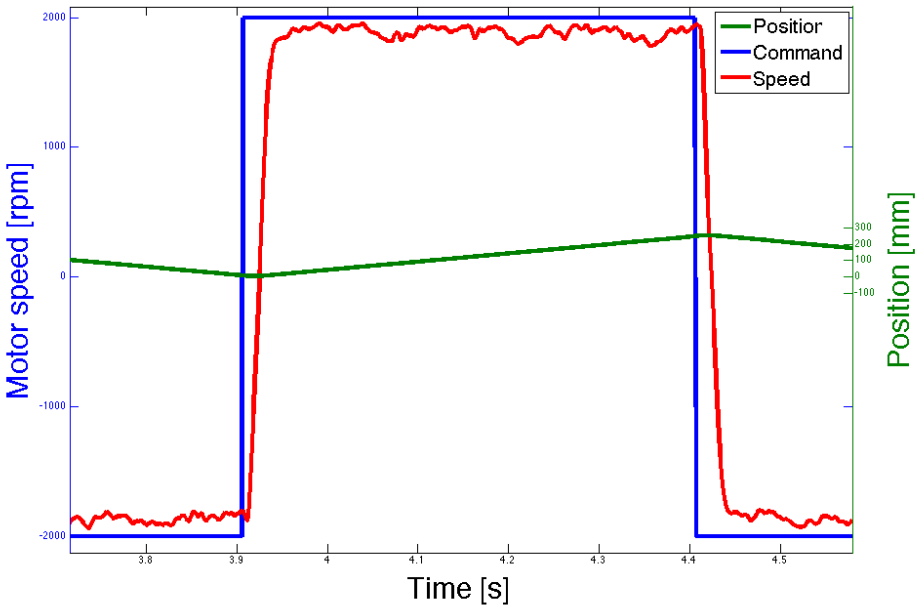

Figure 16: Translation system open loop step response

We applied an alternating square command (-2000 rpm to 2000 rpm) due to geometrical considerations and the recorded data are shown on Figure 16. In terms of speed, the system appears to be a second order system, as the speed starts to grow slowly at the beginning.

One can notice that the speed gain is close to one, but just lower due to some static friction. There is a small delay in the speed response, that actual varies from time to time (from 40ms to 8ms in this case). We think this is due to the fact that the speed is differentiated from the position in the ESCON box, maybe with its own dynamic. There is also an oscillating component to the speed probably linked to the timing belt and some irregularities in the pulleys. The position information is affected by a much lower delay. This time, it is probably only due to the static friction.

Rotation system

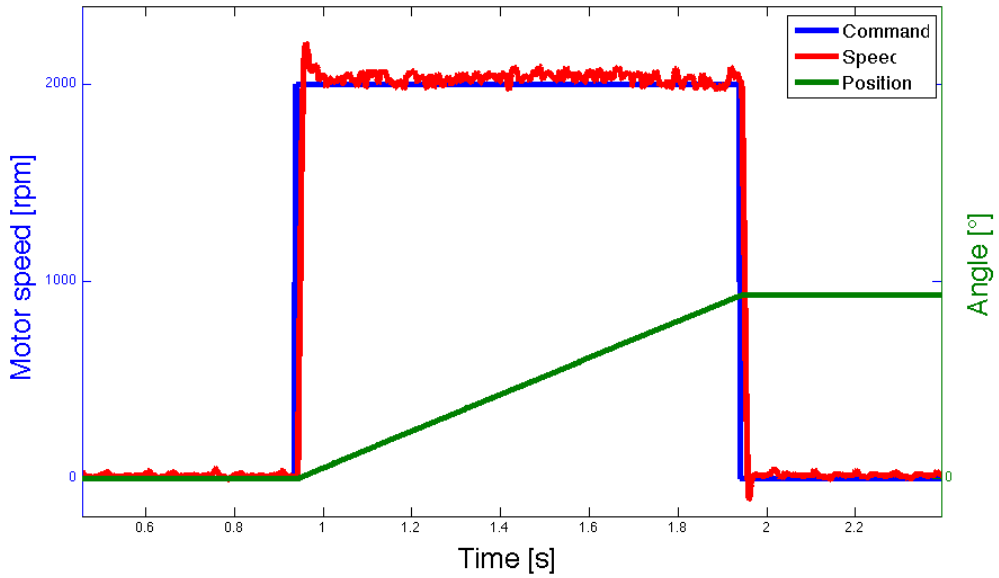

Figure 17: Rotation open loop step response

We applied this time a simple square command (0 rpm to 2000 rpm) and recorded the data shown on Figure 17. In terms of speed, it appears to be a second order system as the raising edge goes higher before stabilizing with a gain close to one. Again, one can notice some delay, but it's lower then for the translation system, as there is almost no friction.

Performance assessments

With our system now being functional, we can finally verify that we meet the specified requirements. To be able to compare the values, we followed the same procedure we used for the human performances and the same camera. After analyzing the videos, we get the following values:

Translation		Rotation	
Longest translation	370 [mm]	Speed of the ball after a shoot	6 [m/s]
Duration of the longest translation	180 [ms]	Duration of a shoot (180°)	38 [ms]

Table 4: Performances of our mechanism

The performances are impressive and they more then match a regular human player.

We also recorded the data coming from LabView to get a more precise idea of the behavior of the controller.

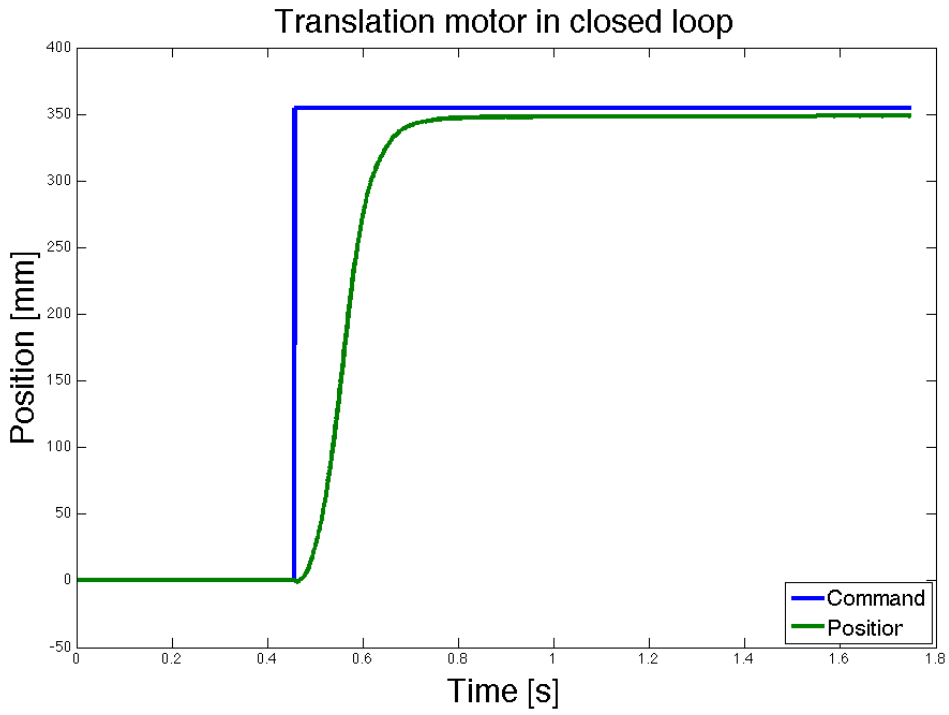

Figure 18: Closed loop step response of the translation motor

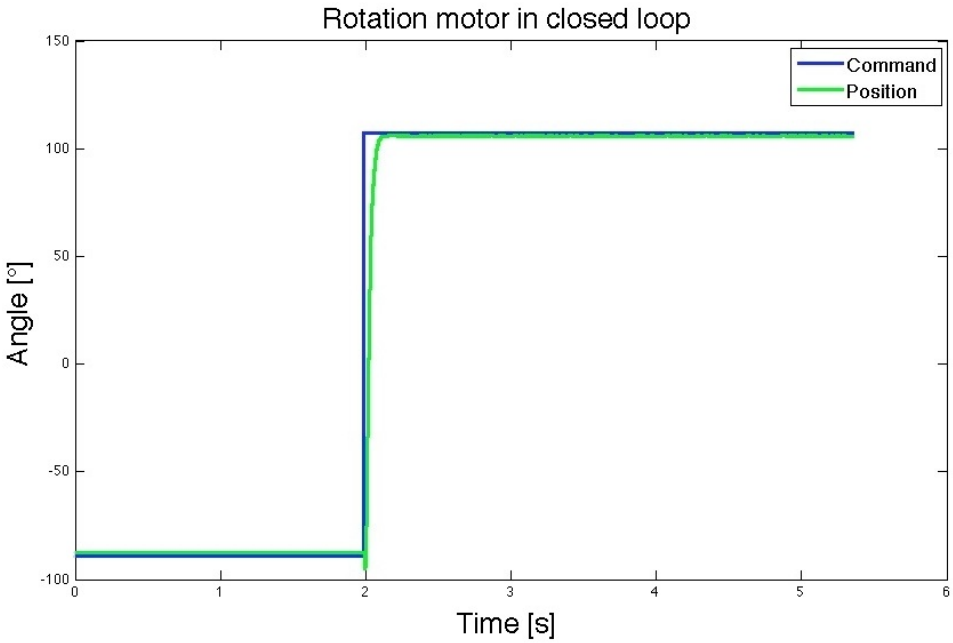

Figure 19: Closed loop step response of the rotation motor

We can notice that there is a permanent error on both systems, but it is more significant on the translation motor (static friction). The accuracy is still good enough for our demonstration and for basic game control. Not surprisingly, the translation system has a higher inertia, which is clearly visible on Figure 18.

Finally, we also need take into account the following facts:

- The controller could force the motors to be even more aggressive (the full speed command is only given a short amount of time).
- For the translation, the two tests (human, mechanism) were not exactly the same. The system performs only one movement and doesn't take advantage of the springs to stop at the edge.

Possible improvements

Several improvements could be made to increase the performances or the simplicity of the system, in particular to the mechanical part, structure included.

The observation we made while setting the system on the foosball was that it is very difficult to set the concentricity between the handle system and the axis of the foosball. In order to make this operation easier for the user, here are a few points that could be done in further versions.

First, the structure does not posses any height setting screw that would be helpful to set this concentricity, at least with the vertical axis. Such a system, with one or even two screws at the top of the structure, is easy to make and does not require much machining. A similar system could also be done for the lateral position, in order to get a precise setting of the concentricity.

Second, the handle system would need some improvement. Even if it is able to accomplish its basic function, the concentricity is hard to guarantee because of the three screws. Furthermore, these screws, because of their size and the accelerations they transmit, cause some irreversible damage on the handle of the bar. In our case, the imperfections in concentricity are compensated by the flexion of the bar and the softness of the handle. A completely new design of the piece of the handle system would be appreciable. A system similar to a drill mandrel, where the three jaws are synchronized in their movement, may be a solution applicable in our case, even if its complexity and weight are greater than the current system.

Concerning the structure, a more "user-friendly" fixation between the foosball and the structure is necessary. Since we did not know on which foosball the system would stand, it was very risky to design a definitive fixation mechanism. But now that the foosball is here, the conception could go further, for example with screws, such as represented on Figure 20.

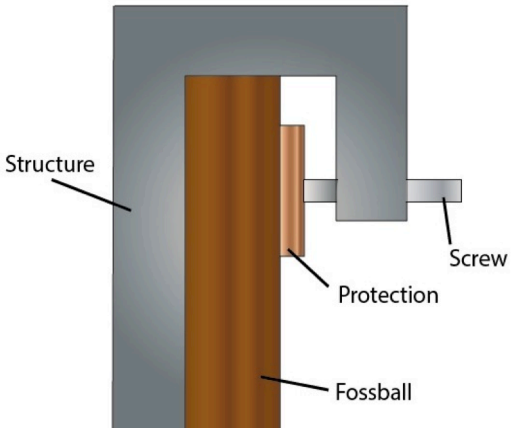

Figure 20: Example of possible new fixation

As was seen when assessing the performances, there is some permanent error remaining and a more complex controller could help.

Finally, the security sensor could be fixed with for example a recent NOR gate with a clear datasheet to be sure of the way it has to be connected.

Conclusion

The whole system is working very fine and its performances fit perfectly the scope statement. The choice of the motors was *a posteriori* very pertinent, confirming the quality of the dimensioning calculation we made. The mechanism matches the human performances in term of speed with a good precision. The team stayed organized and managed the time well, in order to have everything build two weeks before the end of the semester. A few surprises happened during the project, for example the need of two commutators for the EC motors. This was not expected and the surprise came with the motors, but thanks to the good time management, the problem was quickly solved without slowing down the project. In general, this project improved our skills in many ways such as mechanical design, electronic basis, LabView programming but also as time, tasks and team management.

It is certain than, as mentioned, some improvement would be welcomed for further development of the system. However, the current configuration is totally ready for the next step of automation, the “artificial intelligence” which will compute an effective move based on the position of the ball and send the command of position to our system through its LabView interface in order to execute this move. The whole mechanism is faster and hardier than the majority of foosball actuators that can be seen on the Internet, with the advantage of being easily detachable from the foosball.

Acknowledgement

We would like to thank the automatic laboratory which provided us with a very good working environment and precious help, with a special thanks to Dr. Salzmann and Mr. Tschantz, who both took plenty of their time to help us solving our problems. The laboratory encouraged us to be creative, to do what we though good for our project but never without good advices. The mechanical workshop was very helpful as well and did very professional and flexible work. Mr. Jeanneret spent a lot of time exanimating our plans with us to bring improvement to our concepts. A big thank for him.

Furthermore, both the automatic laboratory and the workshop have shown a constant interest in our work and its progress. It was very appreciated.

Bibliography

Allied Vision Technologies; FH Köln. AVT Pike Makes Foosball Robot Nearly Unbeatable. Köln.

Fanchon, Jean-Louis. Guide des sciences et technolohies industrielles. Paris: Nathan, 2010.

FH Köln. Table Soccer Robot. http://www.youtube.com/watch?v=DVM0utYKUOY.

Forbo-Siegling. "Siegling Proposition – Timing Belts Calculation Methods." <http://www.forbo-siegling.com/pages/brochures/technical/technical_en.html>.

Texas Instruments. Motor Control: Brushless DC. <http://www.ti.com/solution/motor_control_brushless_dc>.

Appendix

I. Material for the mechanism

Here is a list of the ordered parts:

- **Optibelt:**
  - 2 x pulleys 36 AT5/14-2
  - 1 x timing belt 25 AT5/1050
- **INA-FAG:**
  - 1 x ball bearing 61803-2Z
  - 1 x ball bearing 608-2Z
  - 2 x plain bushes EGF08075-E40-Y
  - 1 x clamping plate CP-25 AT5
- **NSK:**
  - 1 x linear rail P1E090600RKN
  - 1 x ball slide PAE09TRS
-

Those parts were ordered through Rollin SA in Renens.

II. Material for the structure

All these devices were bought on item.com. The illustrations are owned by ITEM.

- **Profiles 20x20:**
  - 2 x 520mm (long horizontal)
  - 4 x 100mm (short horizontal)
  - 2 x 308mm (vertical)
  - 2 x 336mm (diagonal)

- **Profiles 40x20:**
  - 1x100mm

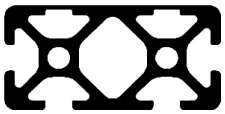

- **Assembly components:**
  - 18 équerres V Zn M5
  - 4 articulations 5 20x20 M4
  - 2 standard fixations
  - 7 T-slut nuts 5 st M5

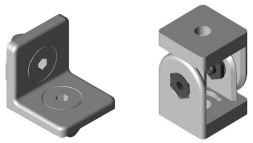

- **Other:**
  - 4 blacks profile mask

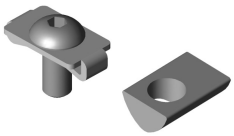

III. Motors datasheet

In an effort to help future students with the use of our mechanism, we detail here part of the motors specifications. For further details, we recommend consulting maxon motor website, from where these were extracted.

Rotation motor			
EC-4pole 22, brushless, 120 Watt, Part number 311537			
Characteristics		**At nominal voltage**	
Speed constant	497 rpm V^{-1}	Nominal voltage	36.0 V
Speed / torque gradient	16.4 rpm mNm^{-1}	No load speed n_0	17800 rpm
Rotor inertia	8.91 gcm^2	Nominal speed	16700 rpm
Thermal time constant (winding)	6.84 s	Nominal torque	63.1 mNm
Number of pole pairs	2	Nominal current	3.41 A
Weight of the motor	170 g		
Planetary Gearhead GP 22 HP Ø22 mm, Part number 370688		**Encoder HEDL 5540, Part number 110512**	
Reduction	855.0/52.0	Counts per turn	500
Weight	64 g	Number of channels	3

Translation motor			
EC-4pole 30, brushless, 200 Watt, Part number 305014			
Characteristics		**At nominal voltage**	
Speed constant	466 rpm V^{-1}	Nominal voltage	36.0 V
Speed / torque gradient	4.78 rpm mNm^{-1}	No load speed n_0	16700 rpm
Rotor inertia	33.3 gcm^2	Nominal speed	16000 rpm
Thermal time constant (winding)	2.13 s	Nominal torque	129 mNm
Number of pole pairs	2	Nominal current	6.7 A
Weight of the motor	300 g		
Planetary Gearhead GP 42 C Ø42 mm, Part number 203114		**Encoder HEDL 5540, Part number 110514**	
Reduction	13.0/3.0	Counts per turn	500
Weight	260 g	Number of channels	3
Mass inertia	9.1 gcm^2		

IV. Mobile mass in translation (Based on catalogs and Catia models)

• Carriage	
• Cloche	
• Ball bearing	total of 194 g
• Handle system	
• Clamp	
• Cylindrical ring	
• Skate	40 g
• Rotation motor	170 g
• Gear	64g
• Encoder	unknown, 10 g *a priori*
• Bar	650 g
• Handle	100 g
• Stops	40 g
• Player	15g/player
• Belt	120 g
• Pulley	50 g*cm^2

Total masse with 4 players: 1580 g

Moment of inertia reported to the axis of the translation motor (with pulleys of diameter 22.29): 2.06 *10-4 kg*m^2

V. Wiring table

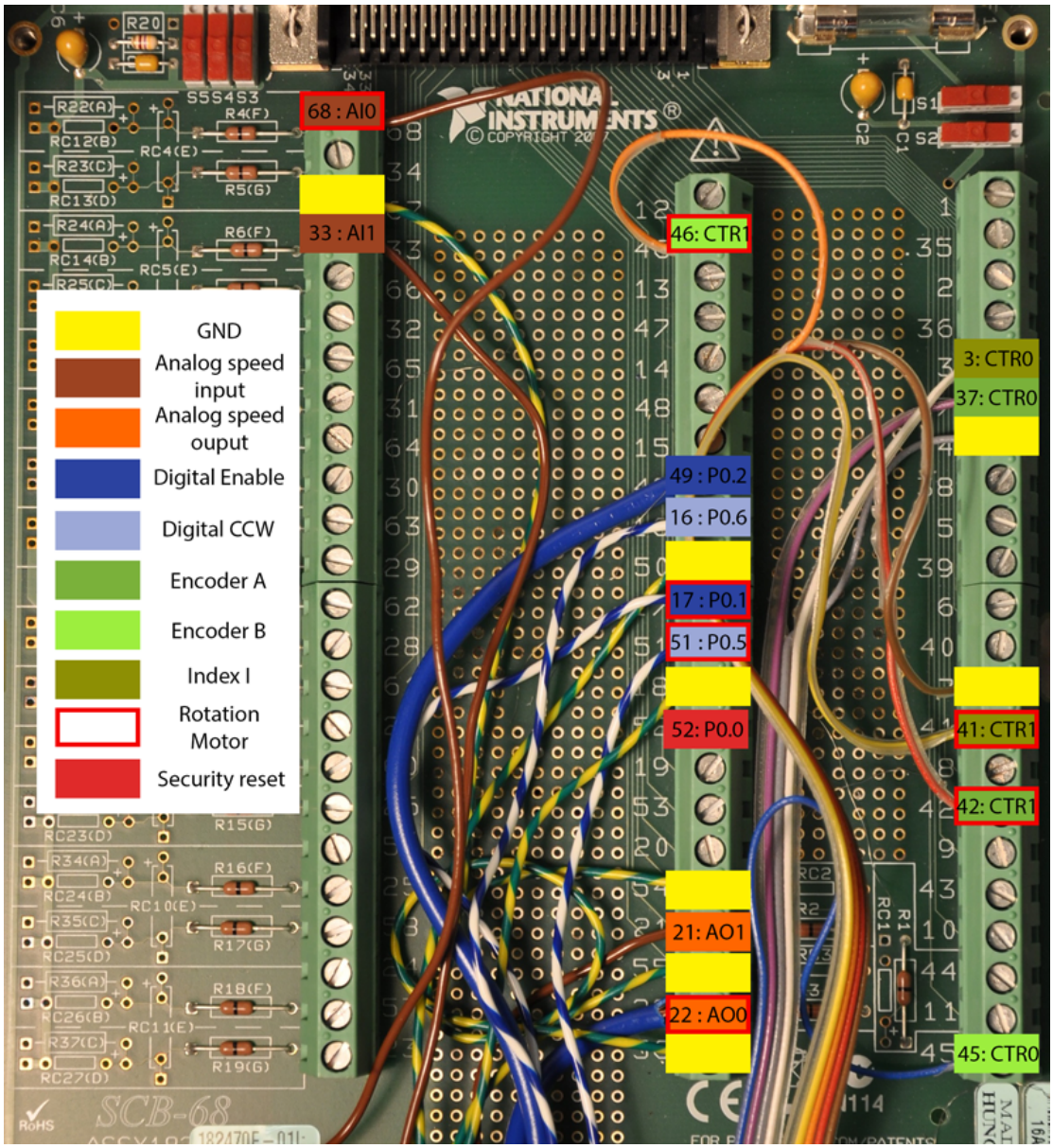

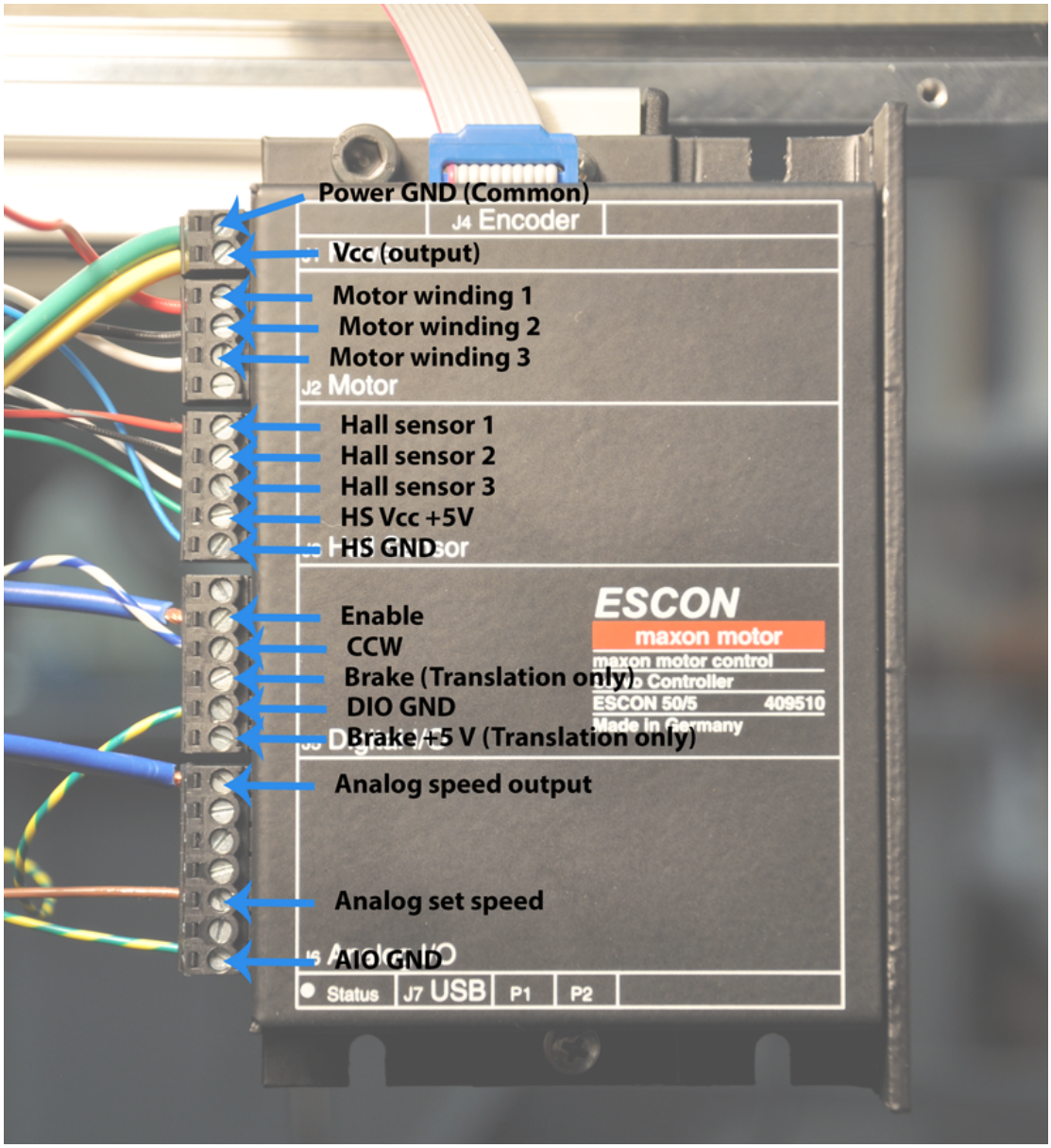

Security wiring table:

GND	Yellow/green
Vcc +5V	Brown/green with black tape
Reset	Brown/green
Brake	Yellow

VI. ESCON 50/5 configuration

General views of the configuration

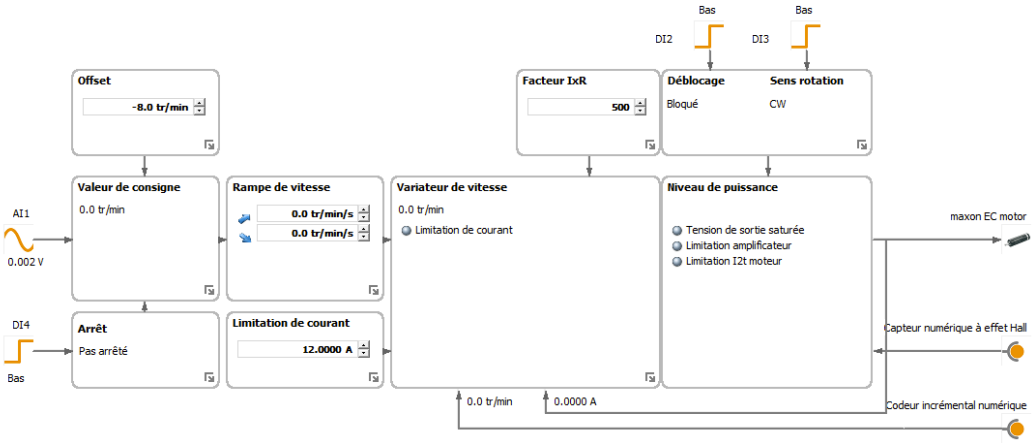

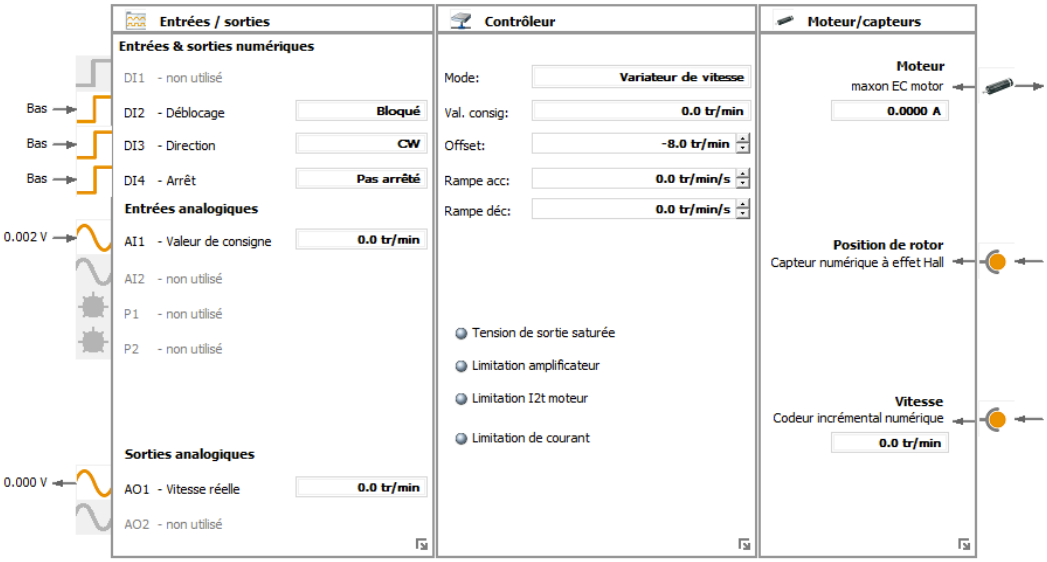

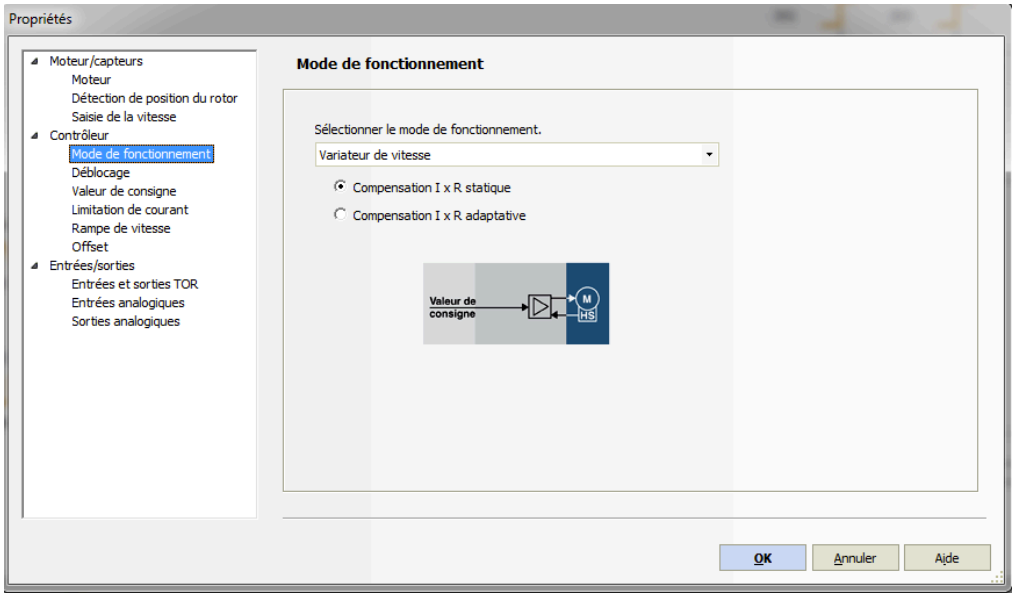

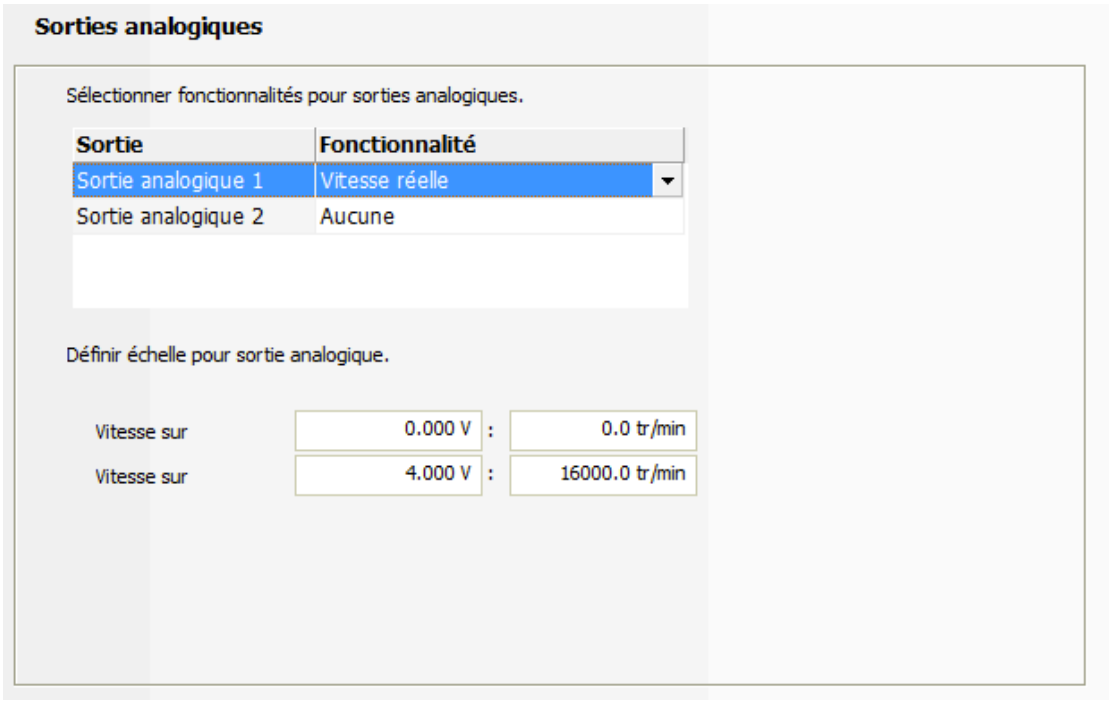
Sorties analogiques
Sélectionner fonctionnalités pour sorties analogiques.
Sortie
Fonctionnalité
Sortie analogique 1
Vitesse réelle
Sortie analogique 2
Aucune
Définir échelle pour sortie analogique.
Vitesse sur
0.000 V
:
0.0 tr/min
Vitesse sur
4.000 V
:
16000.0 tr/min

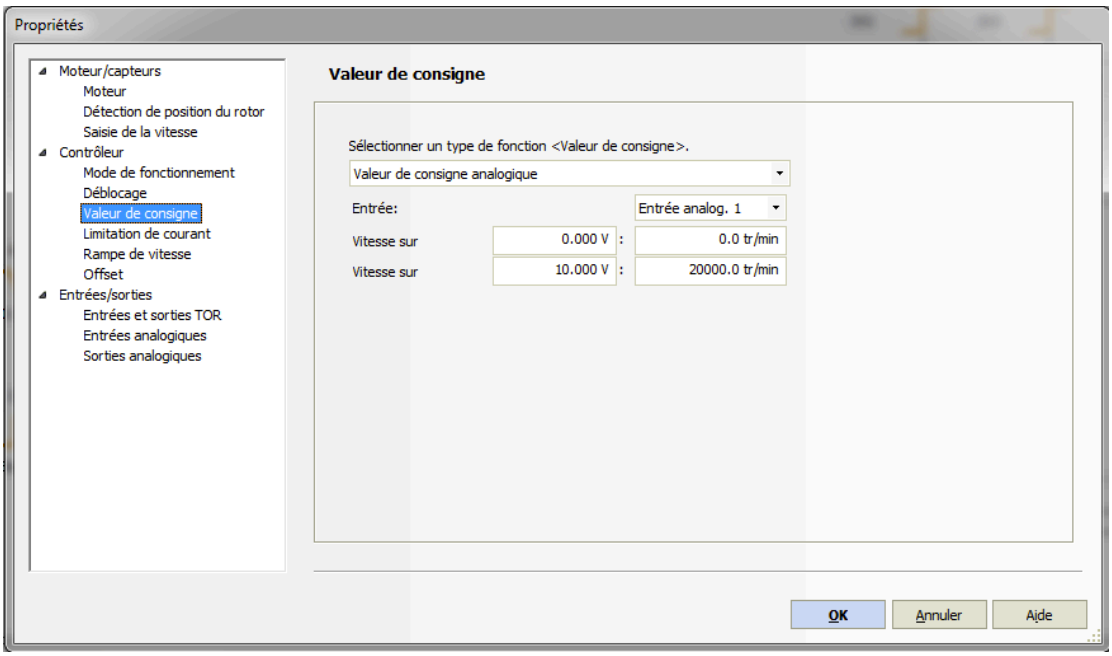
Propriétés
Moteur/capteurs
Moteur
Détection de position du rotor
Saisie de la vitesse
Contrôleur
Mode de fonctionnement
Déblocage
Valeur de consigne
Limitation de courant
Rampe de vitesse
Offset
Entrées/sorties
Entrées et sorties TOR
Entrées analogiques
Sorties analogiques
Valeur de consigne
Sélectionner un type de fonction <Valeur de consigne>.
Valeur de consigne analogique
Entrée:
Entrée analog. 1
Vitesse sur
0.000 V
:
0.0 tr/min
Vitesse sur
10.000 V
:
20000.0 tr/min
OK
Annuler
Aide

VII. Assembly Guide

The purpose of this document is to provide the user with a set-by-step guide to help him in the assembly of the mechanism, in order to avoid mistakes and save time.

This present guide should be used in parallel with the assembly plan, as a complementary document.

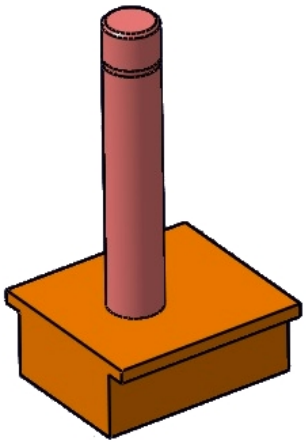

Insert the regular steel axis in the tightener using a manual press, until the piece reaches the other extremity of the hole.

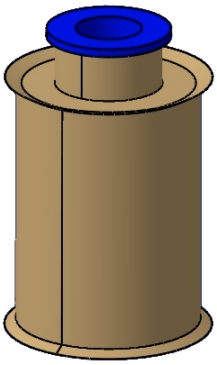

Insert delicately one plane bearing at each extremity of the pulley (the one without feather key groove) with a press.

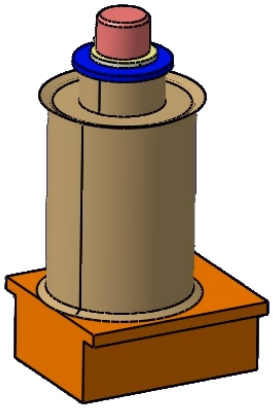

Insert the pulley on the axis. Place the circlip in the groove of the axis and add some lubrication oil in the plane bearing. Control that the rotation of the pulley on the axis is smooth and regular.

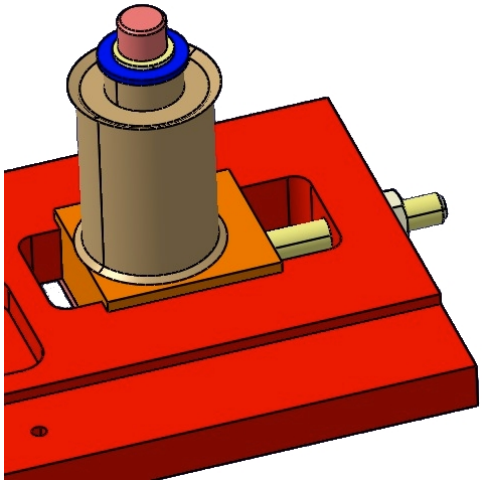

Place the tightener in the square hole at the extremity of the support plate. Insert the long screw in the M5 lateral hole of the piece and screw the nut on it. Without strength, screw the small plate under the tightener.

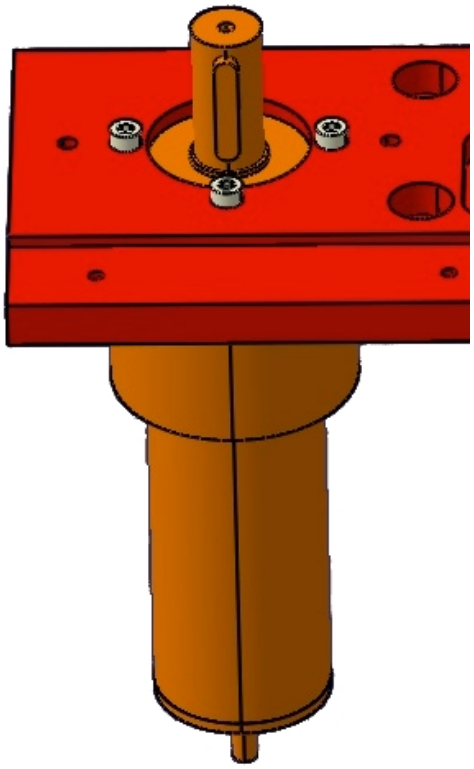

On the other extremity of the support plate, install the translation motor from the underside, as shown on the picture. Attach it with four M4 screws from the upside.

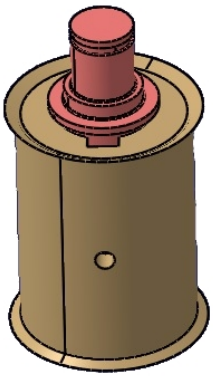

Insert the second steel axis in the second pulley (with the feather key groove) using a manual press.

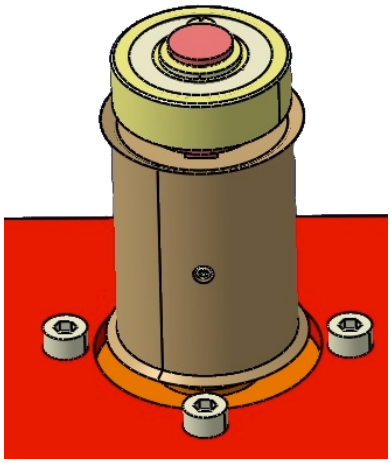

Put the pulley on the shaft of the translation motor. Lock the feather key of the motor using a screw M3 in the pulley. Push the ball bearing of internal diameter 8 on the axis and place the circlip in the groove to block the translation of the bearing.

Place the timing belt on the two pulleys. Adjust briefly the tightener to have a light load in the belt, in order to maintain it on the pulleys.

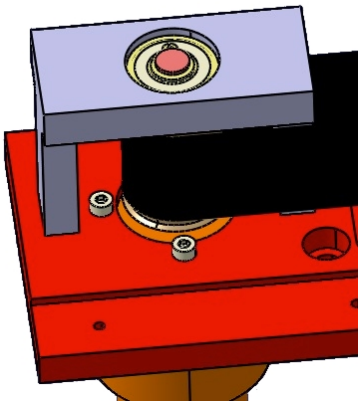

Set the U on the support plate, around the external ring of the bearing. Make the pulley roll before screwing (two M3 screws) it correctly from underside, in order to guarantee to concentricity of the elements. Once correctly screwed, put a correct tension in the belt using the nut of the tightener. Then tighten the four screws of the tightener plate.

Place and screw the gliding track in the lateral groove of the support plate with nine M3 screws. Make sure the skate does not exit the glide

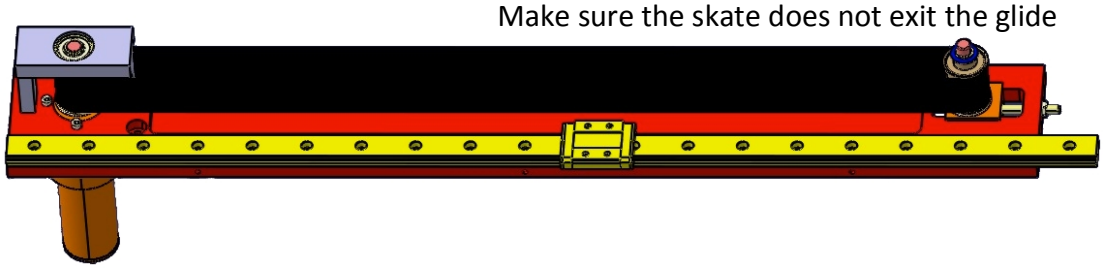

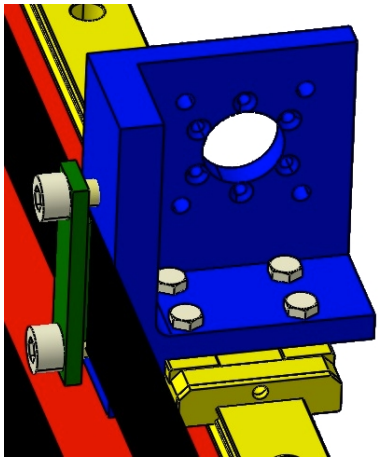

Link the belt to the carriage using the clamp with two screws M5.

Install the carriage on the skate with four screws M3

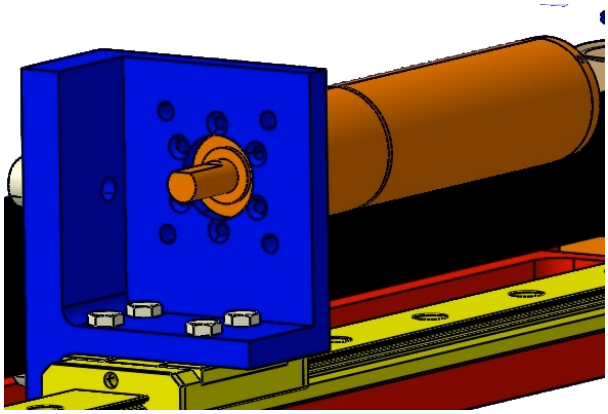

Place the rotation motor from behind in the central hole of the carriage. Attach it solidly with six screws M2 with conic heads. The head of these screws must not go past the surface of the carriage.

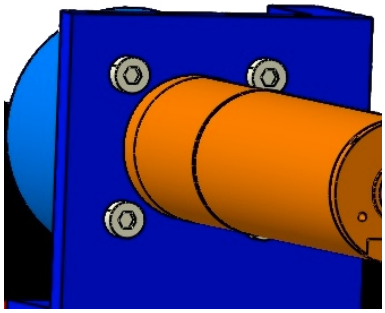

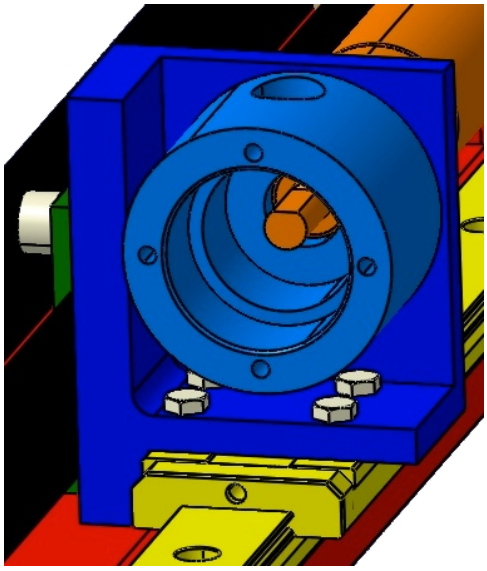

In the same central hole, insert the Cloche with its lateral hole upside. From behind the carriage, attach the Cloche with four screws M3.

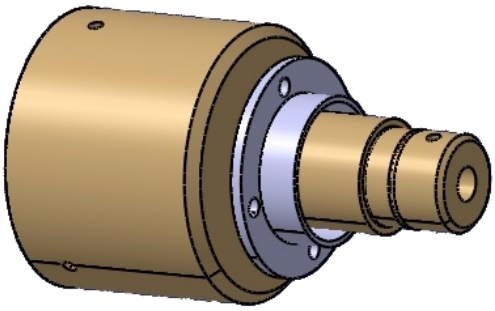

Place the handle piece in the ring. It is necessary to put this piece before the ball bearing.

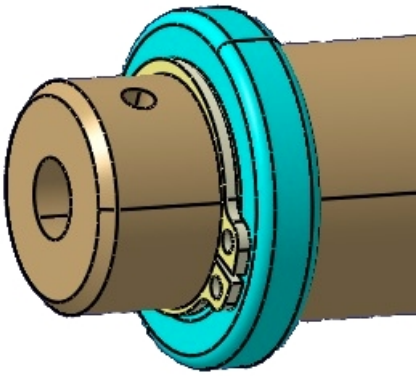

Using a press, insert the second ball bearing around the handle piece. Secure its position with a circlip in the groove of the handle.

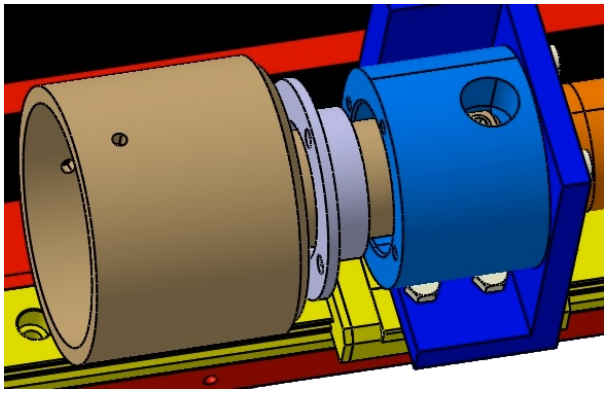

Position the external ring of the bearing in the bottom of the Cloche central hole. Block the translation of the ball bearing in the hole by screwing the cylindrical ring in the Cloche with four screws M3.

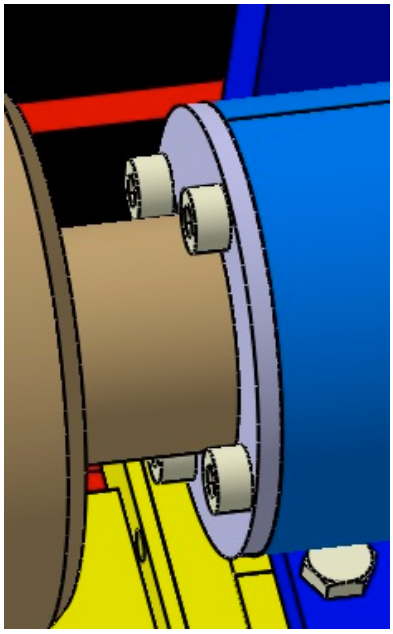

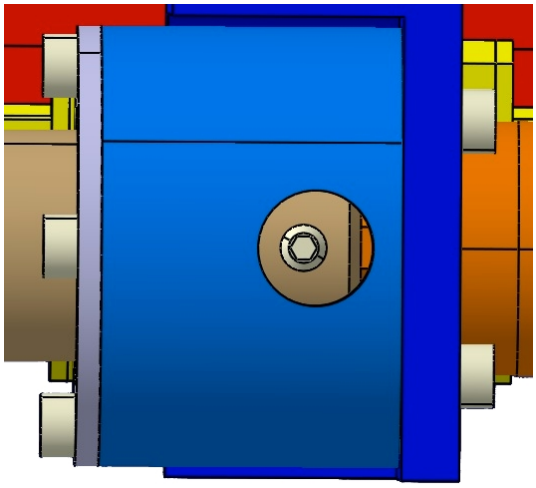

Adjust the shaft of the rotation motor in order to present its meplat in the direction of the Cloche hole. Insert a headless M3 screw in the lateral hole of the handle piece to block the plane. The handle piece is now link in rotation with the shaft of the motor.

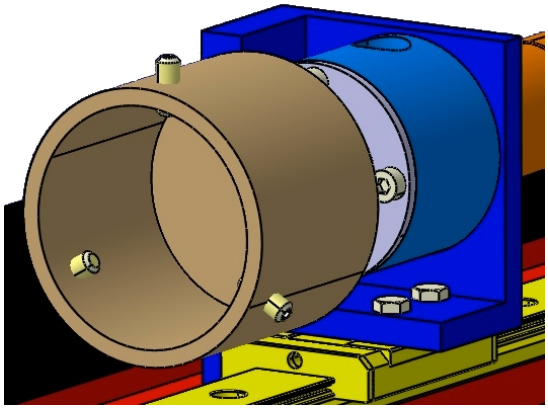

Place three headless M3 screws in the hole on the extremity of the handle piece. These screws must not go past the piece too much or they may collide the “U” while the carriage is translating.

For the structure of the system, here are three pictures showing the results after assembly with low quality 3D model. Due to the simplicity of assembly of ITEM components, we did not include a complete step-by-step guide for this part.

The blue components are the squares (18) and the black ones are the articulations (4).

The holes you see are just the nuts used to attach the support plate of the mechanism to the structure.

Please refer to the components list in the appendix of the report.

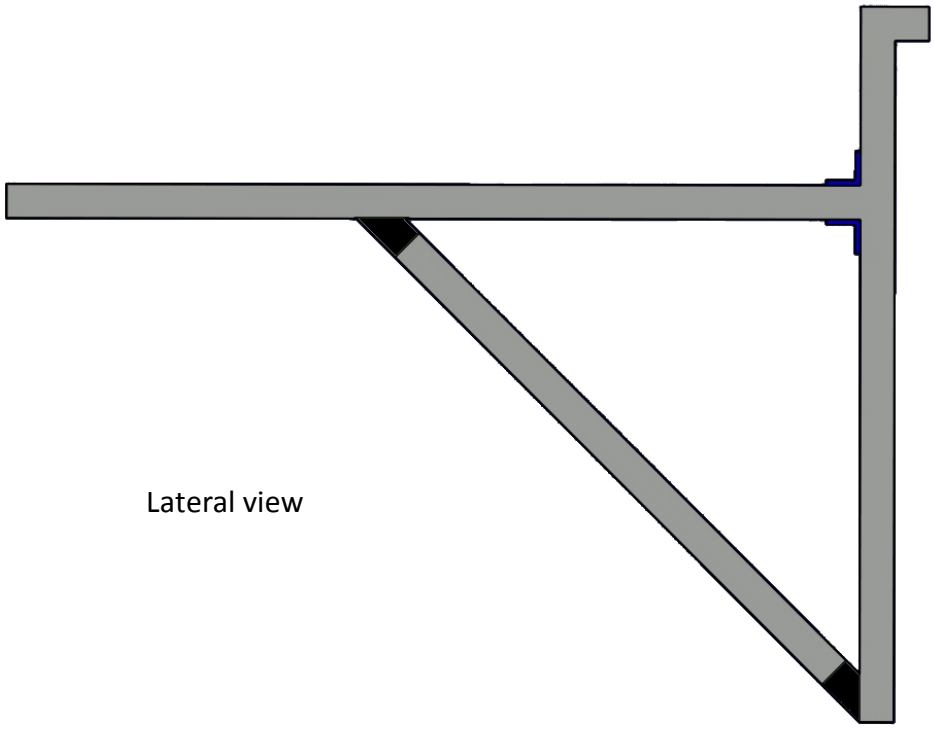

Lateral view

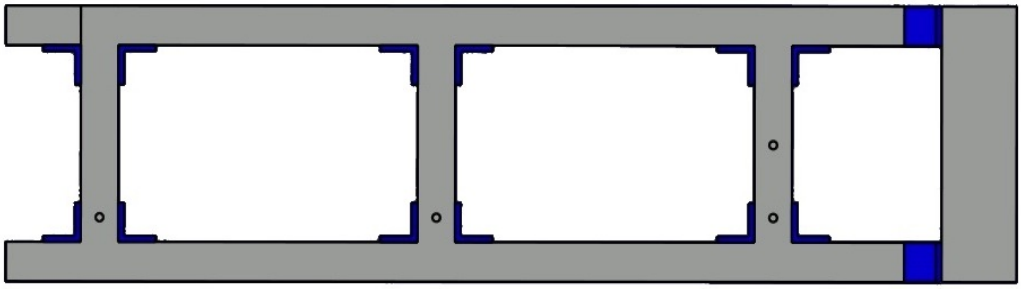

Upside view

Once your structure is assembled, your can attach it to the foosball. For this, use four clamps linking the structure by the top and the bottom, as shown on the picture below.

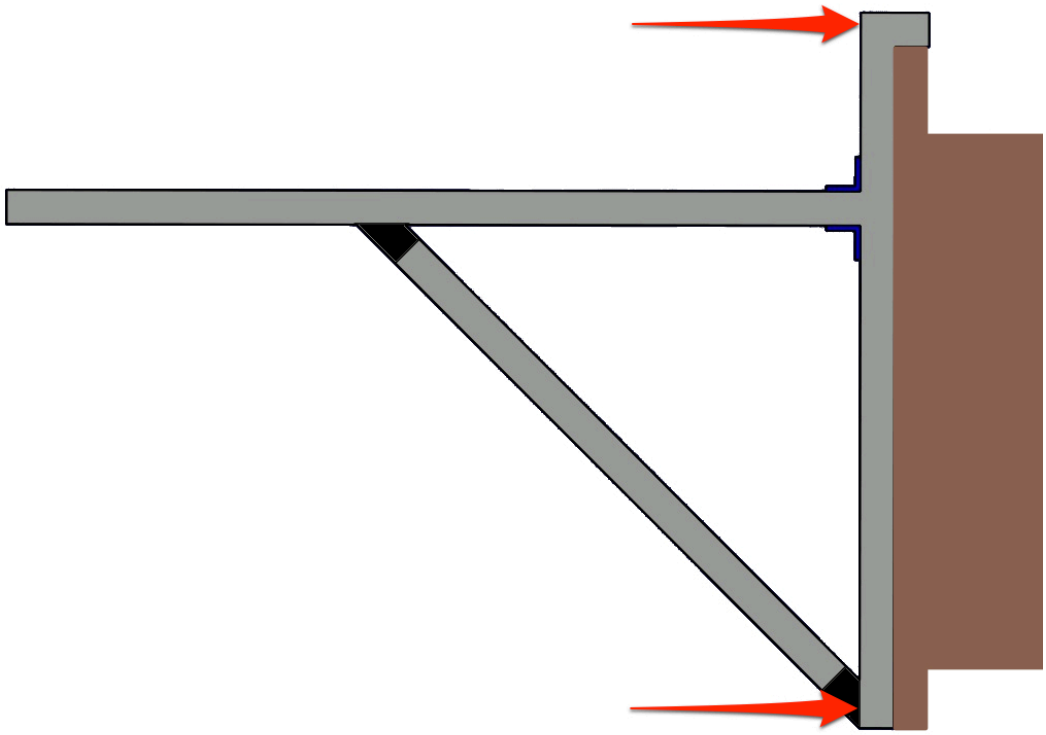

With a spirit level, make sure the horizontal surface is relatively plane. Then attach the mechanism to the structure using three M5 screws.

The position of the structure must now be set in order to guarantee the relative concentricity of the handle piece and the bar of the foosball. For this, try to insert the bar in the handle piece. You will see if your mechanism is off-centered. To adjust the height, proceed in two steps:

1. Untighten the four elements shown on the figure below (two squares and two articulations) on both sides (left and right). By hand, move the horizontal part up or down to adjust the height. Once it seems set, tighten the two times four elements.

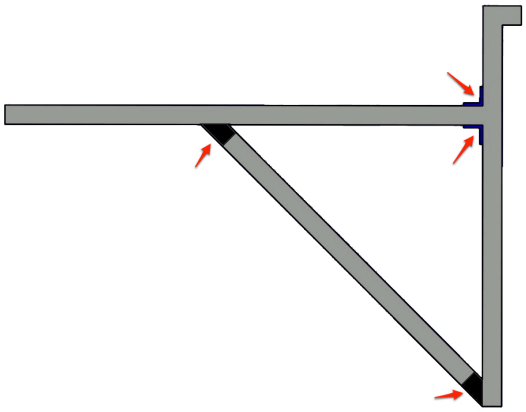

2. To gain accuracy, try again to insert the bar in the system. According to what you notice, untighten very lightly the four clamps. Hit very lightly the structure on the extremity of the vertical profile of the structure until it gets the desired height and check it. Proceed iteratively.

Do not forget to check the horizontal parts are plane and tighten the four clamps once you are done.

To set the support plate parallel to the foosball bar, attach carefully the handle to the mechanism. Tighten lightly one of the screws that attaches the plate to the structure and move by hand the carriage on the gliding track. It will adjust itself to be parallel to the bar. When it seems good, tighten the two others screws.

The actuator is now mechanically ready.

VIII. Quick launch guide

The following lines guide the user to launch the system once it is fully wired and installed.

1. Switch on the power supply.
2. Plug the Thunderbolt wire in the computer
3. Open the VI file controller.vi
4. Launch the VI. The system will automatically search for the extremities of the bar and set the zero.
5. Set the desired position in rotation and translation in the VI.

12-LACO-EG-01
Eliott Guenat
076 526 41 21
Projet Babyfoot
1 assemblage

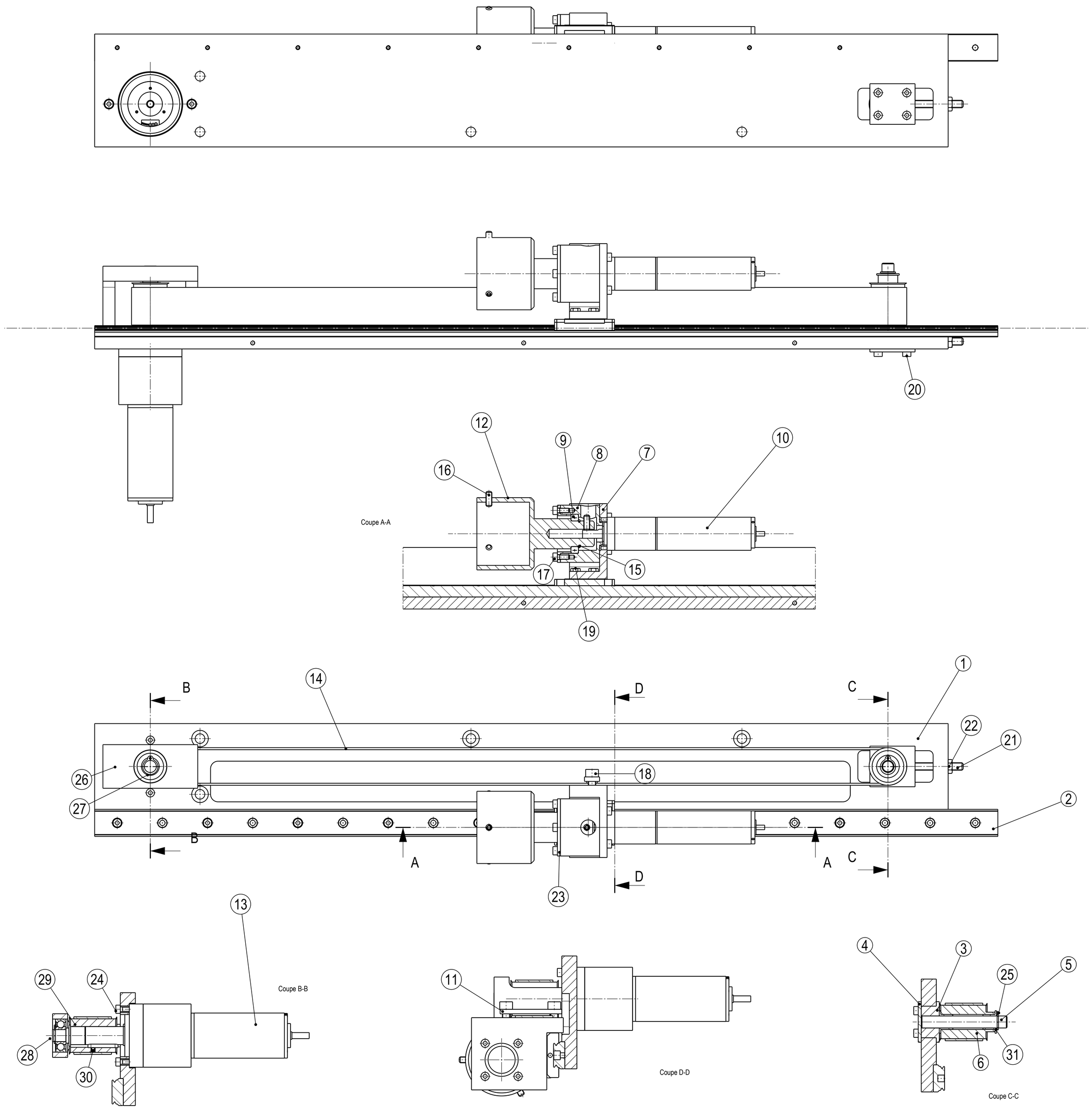

Pos.	Quantité	Unité	Numéro d'identification	Désignation/caractéristiques	
32	1		BSA871100008_NEW_40		Hachures_1,5mm_13 5° ;
31	1		BSA1116215300_NEW_39		Hachures_1,5mm_45°
30	2		BSA1111709013_NEW_39	DOUIL COLR BZ 9/18x9	; Sans hachures ; Couleur noire
29	1		BSA819102003_NEW_39	Vis sans tête 6 pans M2	
28	1		POULIE MOTEUR		EN AC- AlSi7Mg0.3 T6
27	1		AXE_U		2 C 45
26	1		U		
25	1		BSA871100008_NEW_34	Circlips D=7.6	
24	4		BSA816003012_NEW_32	Vis cylindrique 6 pans M3 L=12	
23	1		BAGUE CYLINDRIQUE		EN AW- Al MgSi T6
22	1		BSA831300005_NEW_44	Ecrou 6 pans M5	
21	1		BSA819105012_NEW_43	Vis sans tête 6 pans M5 L=40	
20	15		BSA816003010_NEW_42	Vis cylindrique 6 pans M3 L=10	
19	4		BSA824303010_NEW_41	Vis hexagonale M3 L=10	
18	2		BSA816005010_NEW_25	Vis cylindrique 6 pans M5 L=10	
17	8		BSA816003008_NEW_24	Vis cylindrique 6 pans M3 L=8	
16	4		BSA861004010_NEW_16	Vis sans tête 6 pans M4 L=10	
15	1		BSA871100016_NEW_30	Bague d'arrêt en V pour arbre type A BN- 829	
14	1		COURROIE	25ATS/1050	
13	1		MOTEUR TRANSLATION		Liste
12	1		ACCOUPLEMENT POIGNEE		EN AC- AlSi7Mg0.3 T6
11	1		CLAMPE POUR COURROIE	CP- ATS/25	EN AC- AlSi7Mg0.3 T6
10	1		MOTEUR- ROTATION		Liste
9	1		ROULEMENT	61803- 2Z	
8	1		CLOCHE		EN AC- AlSi7Mg0.3 T6
7	1		CHARIOT		EN AC- AlSi7Mg0.3 T6
6	1		POULIE		EN AC- AlSi7Mg0.3 T6
5	1		AXE		2 C 45
4	1		PLAQUE TENDEUR		EN AC- AlSi7Mg0.3 T6
3	1		TENDEUR		EN AC- AlSi7Mg0.3 T6
2	1		LINEAR- GUIDE- PE090600TRK1PCT- 15- 15- NSK	Linear- Guide- PE090600TRK1PCT- 15- 15- NSK	Liste
1	1		PLAQUE SUPPORT		EN AC- AlSi7Mg0.3 T6

Mod.		Mod.	Désignation	11/2/2012	Projet Babyfoot
			Contrôlé		
			Conf au nom		
			Bon pour exéc.		
			N° de commande		
			Origine		
			Remplace		

Échelle 1:1

Sans nomenclature séparée ☐
Nomenclature sép de même N° ☐
Nomenclature sép de N° diff ☐

Format A0 | Nb feuilles 1 | Feuille N° 1

N° de dessin

Dénomination: Actuateur pour Babyfoot

12-LACO-EG-01
Eliott Guenat
076 526 41 21
Projet Babyfoot
1 pièce

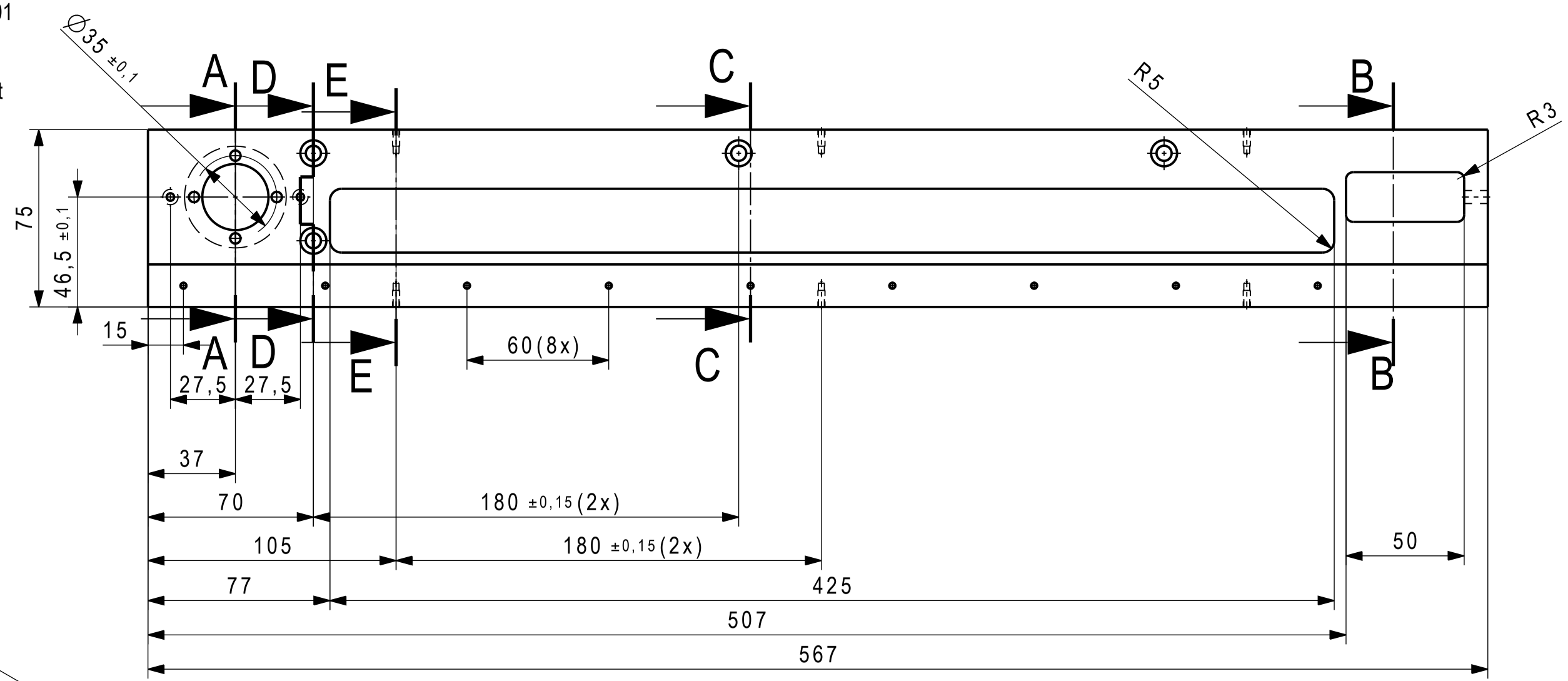

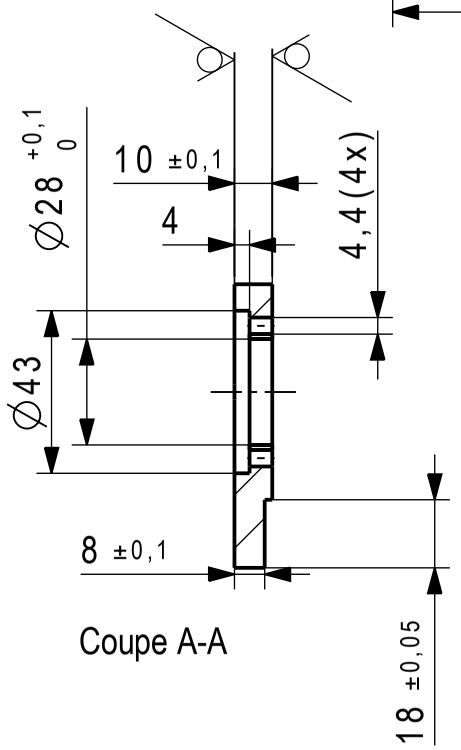

Coupe A-A

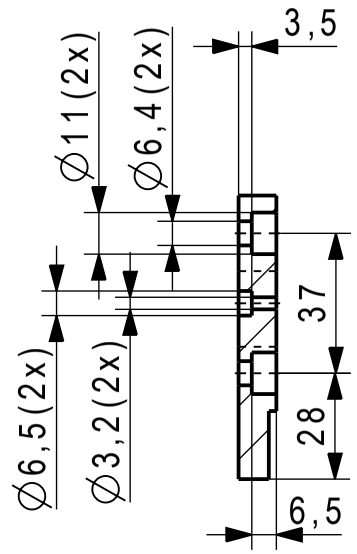

Coupe D-D

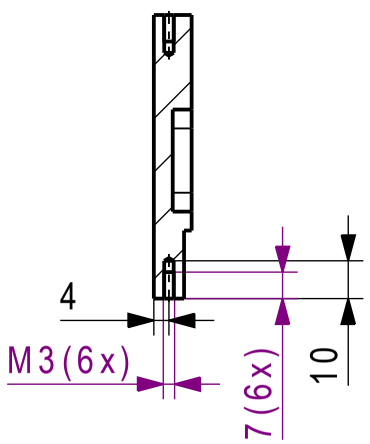

Coupe E-E

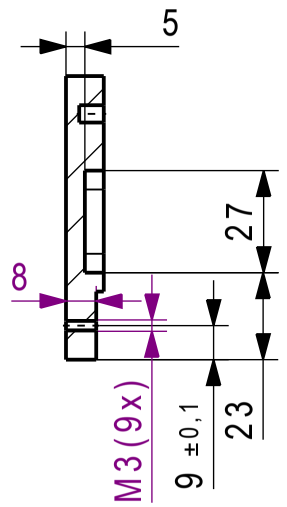

Coupe C-C

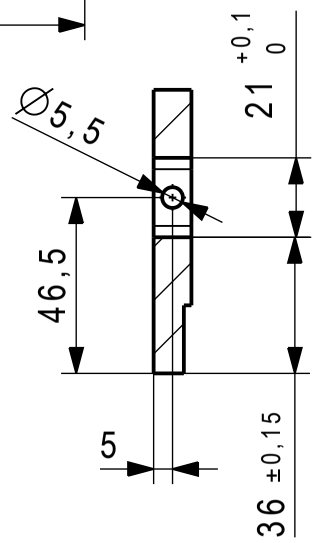

Coupe B-B

Ra 3.2

Chanfreiné 0.1 ... 0.4 x 45°
Tolérances générales:
NF EN 22768 - mH
(ISO 2768 - mH)

Mod.		Dessiné	11/2/2012	Projet Babyfoot	Echelle 1:2
Mod.		Contrôlé			
		Conf aux norm			
		Bon pour exéc.			
Sans nomenclature séparée ☐		N° de commande			
Nomenclature sép de même N° ☐	Matiere	Origine		Format A3	Nb feuilles 1 / Feuille N° 1
Nomenclature sép de N° diff ☐	Masse	Remplace			
EPFL	Dénomination	Support plaque		N° de dessin 1	

Aluminium (ALplon)
0 kg

12-LACO-EG-01
Eliott Guenat
076 526 41 21
Projet Babyfoot
1 pièce

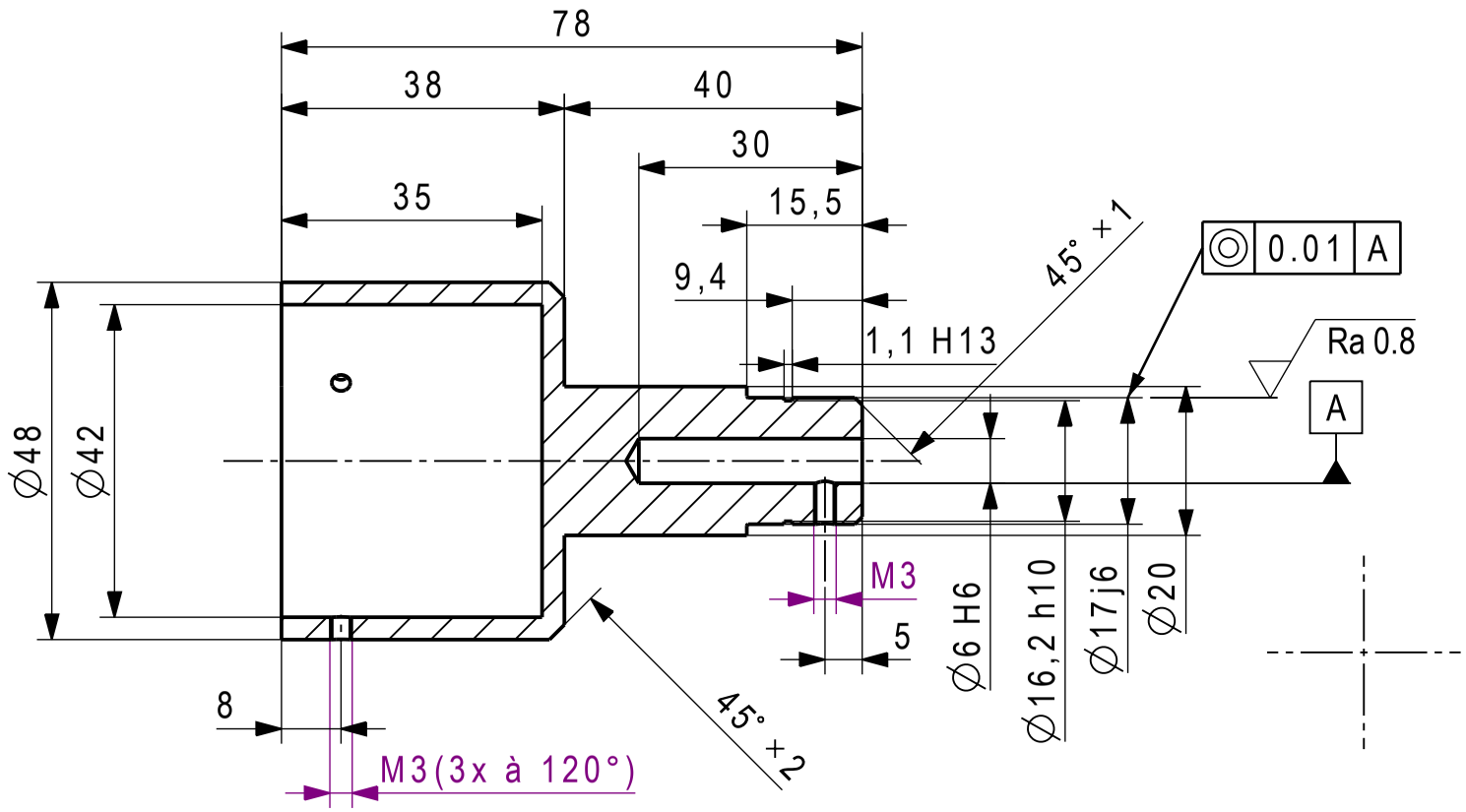

Ra 3,2 ( )

Mod.	Mod.	Dessiné	11/2/2012	Projet Babyfoot	Echelle 1:1
		Contrôlé			
		Conf aux norm			
		Bon pour exéc.			
Sans nomenclature séparée ☐		N° de commande			
Nomenclature sép de même N° ☐	Matiere	AV EN 7075 (fortal)	Origine	Format A4	Nb feuilles 1 / Feuille N° 1
Nomenclature sép de N° diff ☐	Masse	0 kg	Remplace		

Tolérances générales:
NF EN 22768 - fH
(ISO 2768 - fH)

EPFL

Dénomination: Accouplement poignée

N° de dessin: 12

12-LACO-EG-01
Eliott Guenat
076 526 41 21
Projet Babyfoot
1 pièce

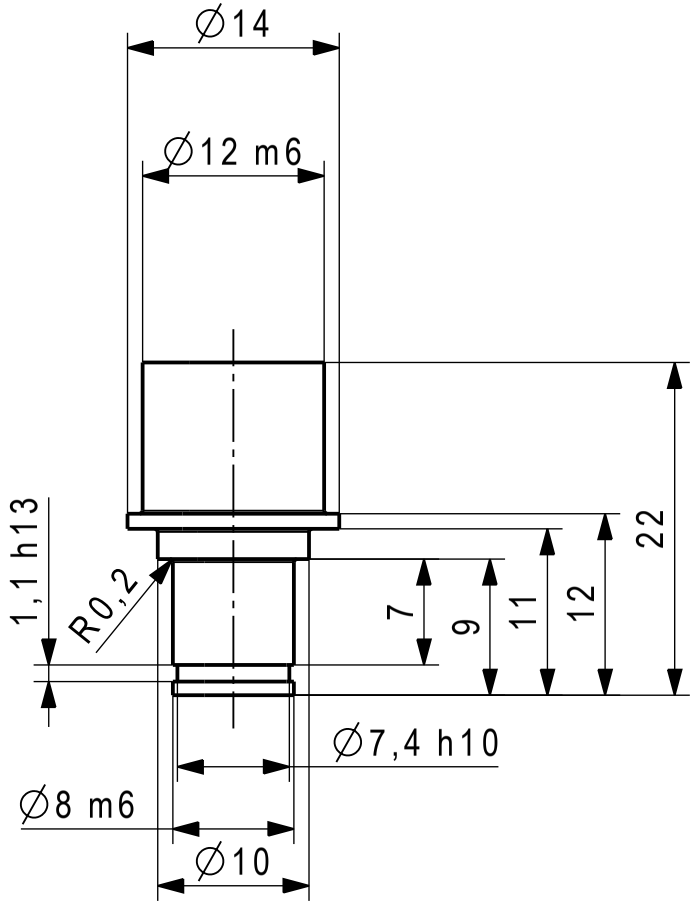

Ra 1.6

Rayons non-cotés: R=0.2
Chanfrein 45°x0.5
Tolérances générales:
NF EN 22768 - fH
(ISO 2768-fH)

Mod.		Mod.		Dessiné	11/2/2012	Projet Babyfoot	Echelle 2:1
				Contrôlé			
				Conf aux norm			
				Bon pour exéc.			
Sans nomenclature séparée ☐				N° de commande			
Nomenclature sép de même N° ☐		Matiere	15NiCr13 (E200)	Origine		Format A4	Nb feuilles 1 / Feuille N° 1
Nomenclature sép de N° diff ☐		Masse	0 kg	Remplace			
EPFL		Dénomination	Axe U			N° de dessin	27

12-LACO-EG-01
Eliott Guenat
076 526 41 21
Projet Babyfoot
1 pièce

Goupille trempée h6

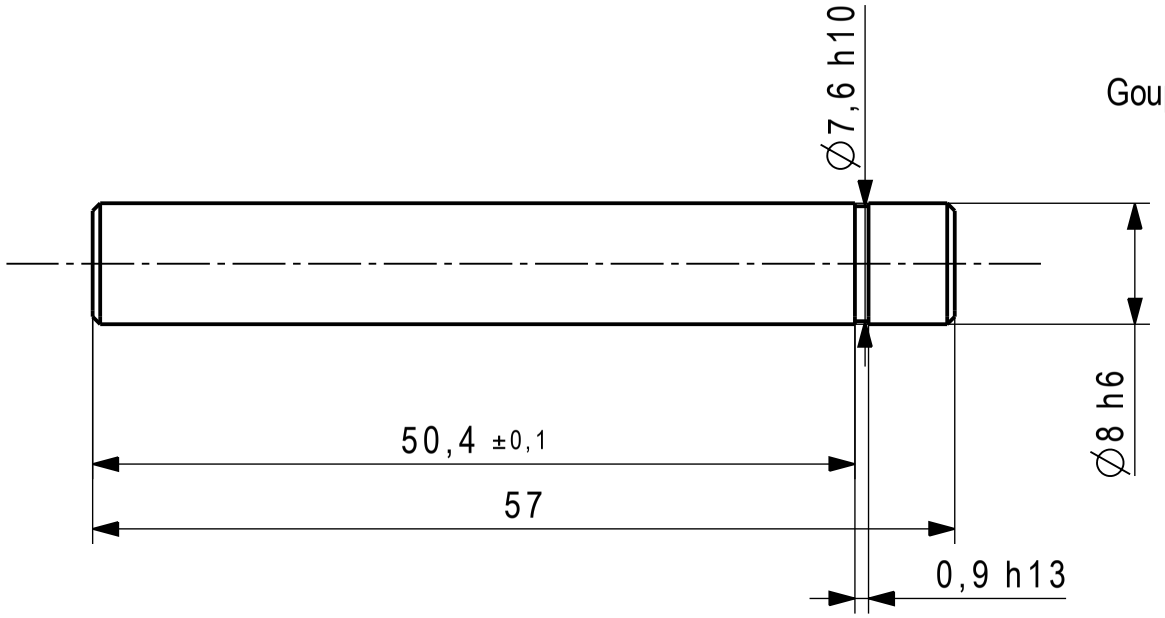

Ra 1.6

Chanfreins non cotés: 45° x 0.5
Tolérances générales:
NF EN 22768 - mH
(ISO 2768 - mH)

Mod.		Mod.		Dessiné	11/2/2012	Projet Babyfoot	Echelle 2:1
				Contrôlé			
				Conf aux norm			
				Bon pour exéc.			
Sans nomenclature séparée ☐				N° de commande			
Nomenclature sép de même N° ☐		Matiere	-	Origine		Format A4	Nb feuilles 1 / Feuille N° 1
Nomenclature sép de N° diff ☐		Masse	0 kg	Remplace			
EPFL		Dénomination	Axe			N° de dessin	5

12-LACO-EG-01
Eliott Guenat
076 526 41 21
Projet Babyfoot
1 pièce

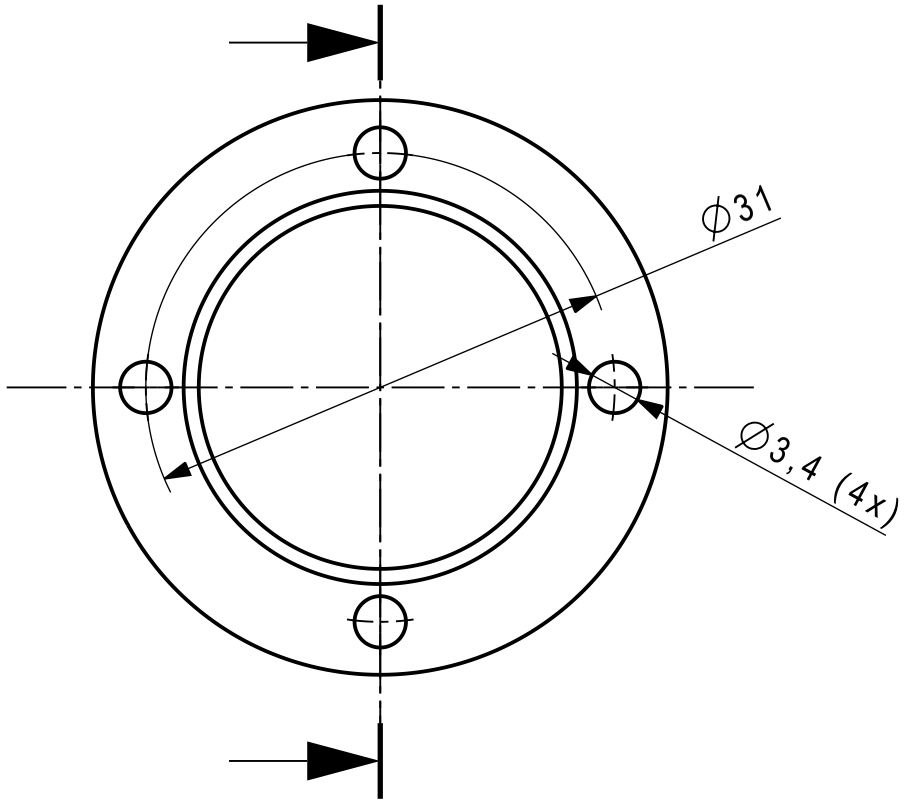

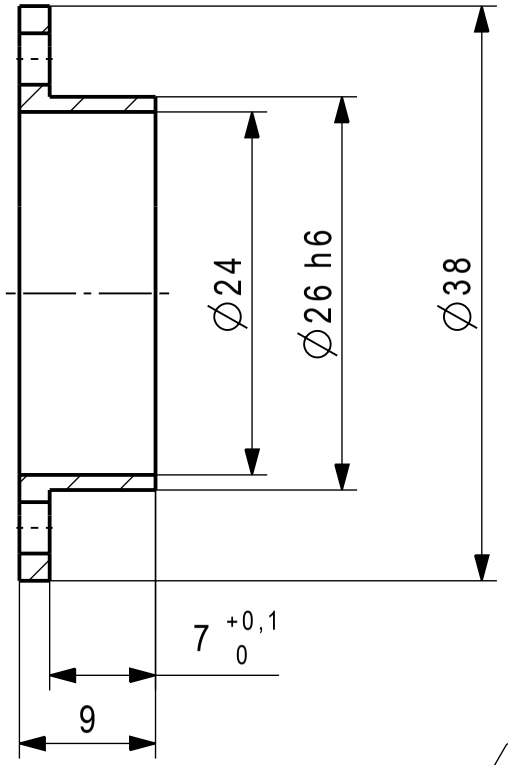

Ra 3,2

Tolérances générales:
NF EN 22768 - mH
(ISO 2768 - mH)

Mod.		Dessiné	11/2/2012	Projet Babyfoot	Echelle 2:1
		Contrôlé			
		Conf aux norm			
		Bon pour exéc.			
Sans nomenclature séparée ☐		N° de commande			
Nomenclature sép de même N° ☐	Matiere: Aluminium	Origine		Format A4	Nb feuilles 1 / Feuille N° 1
Nomenclature sép de N° diff ☐	Masse: 0 kg	Remplace			
EPFL	Dénomination: Bague Cylindrique			N° de dessin 23	

12-LACO-EG-01
Eliott Guenat
076 526 41 21
Projet Babyfoot
1 pièce

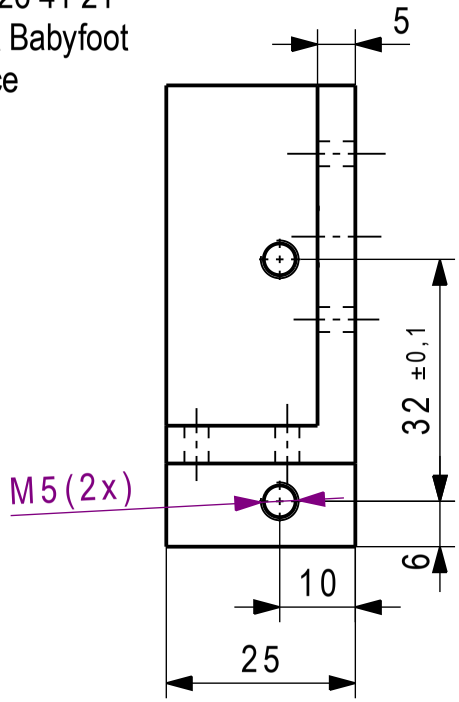

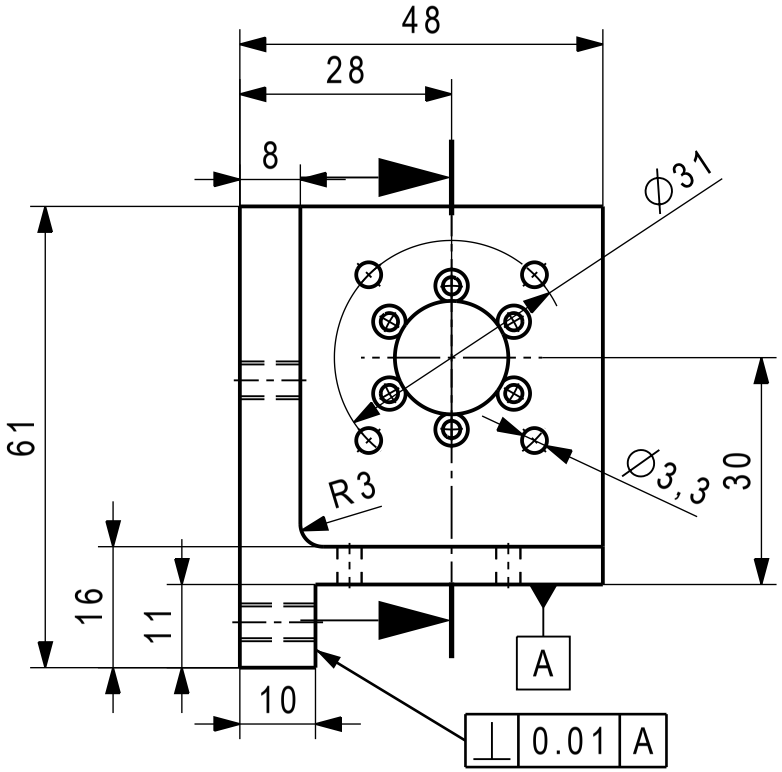

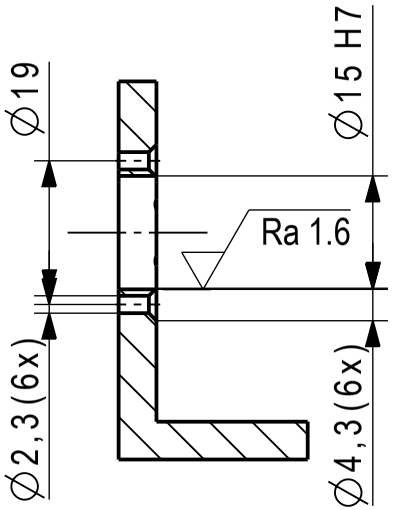

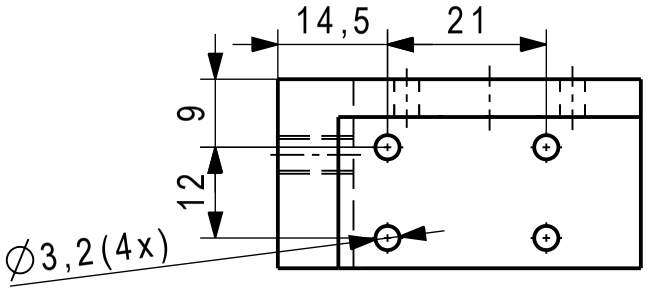

Ra 3,2

Tolérances générales:
NF EN 22768 - mH
(ISO 2768 - mH)

Mod.		Dessiné	11/2/2012	Projet Babyfoot	Echelle 1:1
Mod.		Contrôlé			
		Conf aux norm			
		Bon pour exéc.			
Sans nomenclature séparée ☐		N° de commande			
Nomenclature sép de même N° ☐	Matiere: Aluminium	Origine		Format: A4	Nb feuilles: 1 / Feuille N°: 1
Nomenclature sép de N° diff ☐	Masse: 0 kg	Remplace			
EPFL	Dénomination: Charriot			N° de dessin: 7	

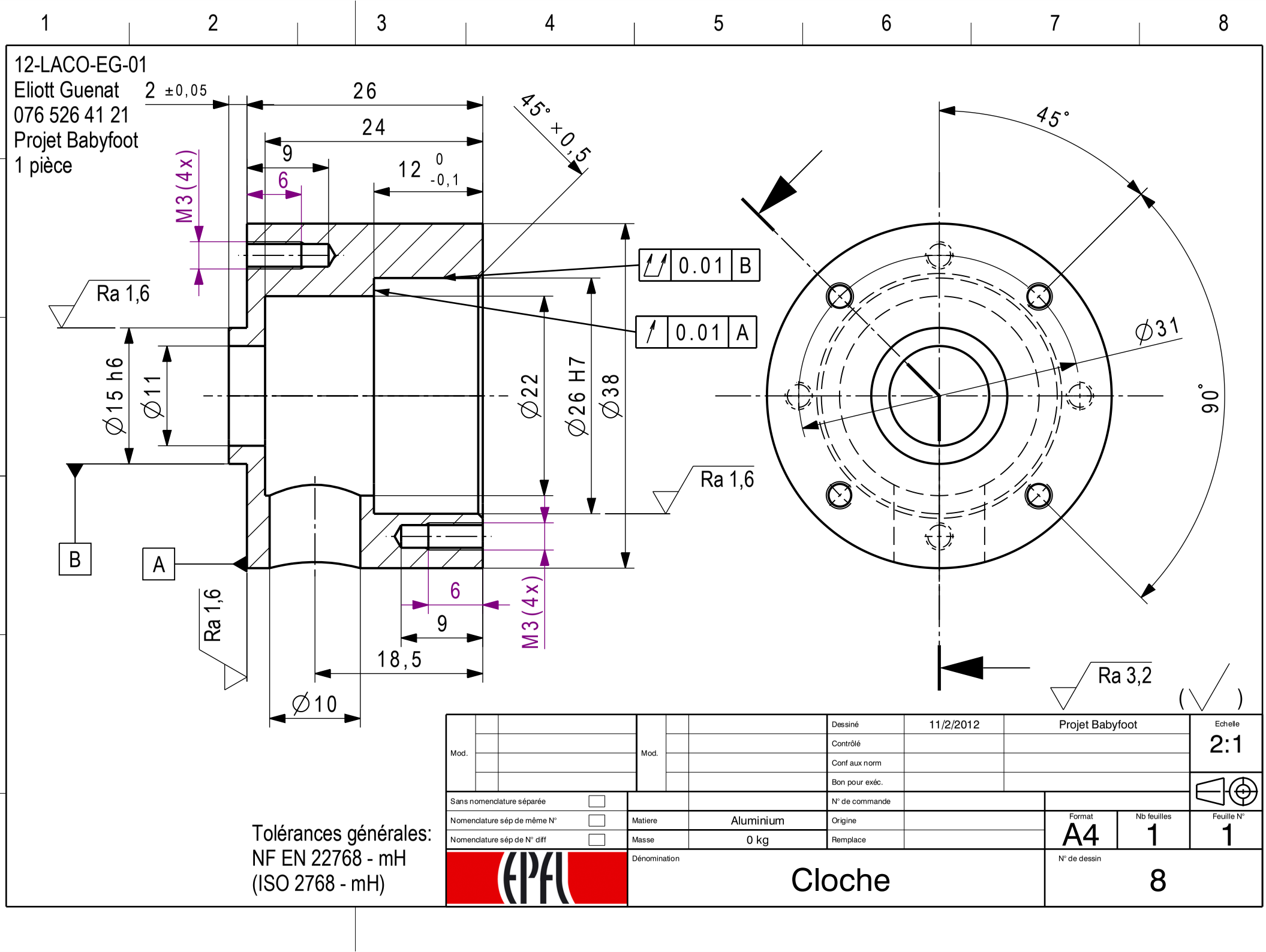
12-LACO-EG-01
Eliott Guenat
076 526 41 21
Projet Babyfoot
1 pièce
2 ±0,05
26
24
9
6
12 0 -0,1
45° +0,5
M3 (4x)
Ra 1,6
0.01 B
0.01 A
Ø15 h6
Ø11
Ø22
Ø26 H7
Ø38
Ra 1,6
B
A
Ra 1,6
6
9
M3 (4x)
18,5
Ø10
45°
Ø31
90°
Ra 3,2
Tolérances générales:
NF EN 22768 - mH
(ISO 2768 - mH)
Mod.
Mod.
Dessiné
11/2/2012
Projet Babyfoot
Echelle
2:1
Contrôlé
Conf aux norm
Bon pour exéc.
Sans nomenclature séparée
Nomenclature sép de même N°
Nomenclature sép de N° diff
N° de commande
Matiere
Aluminium
Origine
Masse
0 kg
Remplace
Format
A4
Nb feuilles
1
Feuille N°
1
Dénomination
Cloche
N° de dessin
8

12-LACO-EG-01
Eliott Guenat
076 526 41 21
Projet Babyfoot
1 pièce

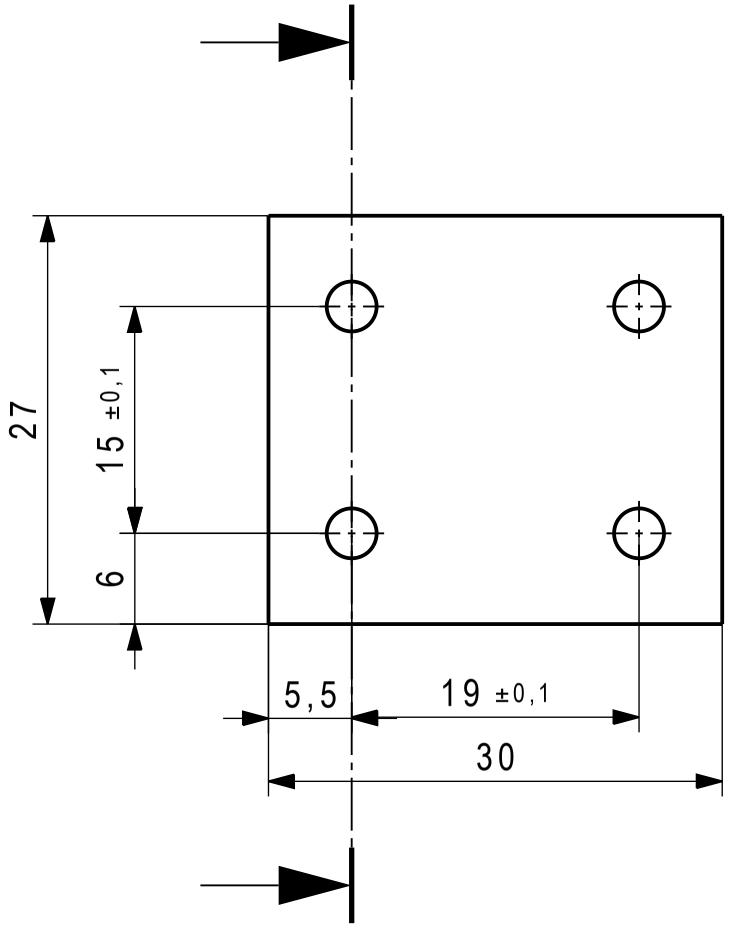

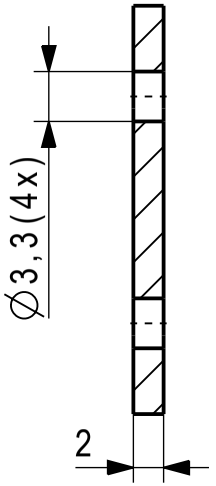

Ra 3,2

Tolérances générales:
NF EN 22768 - mH
(ISO 2768 - mH)

Mod.		Mod.		Dessiné	11/2/2012
				Contrôlé	
				Conf aux norm	
				Bon pour exéc.	
Sans nomenclature séparée ☐				N° de commande	
Nomenclature sép de même N° ☐		Matiere	Aluminium	Origine	
Nomenclature sép de N° diff ☐		Masse	0 kg	Remplace	

Projet Babyfoot

Echelle 2:1

Format A4 | Nb feuilles 1 | Feuille N° 1

Dénomination

Plaque Tendeur

N° de dessin 4

12-LACO-EG-01
Eliott Guenat
076 526 41 21
Projet Babyfoot
1 pièce

Pièce fournie

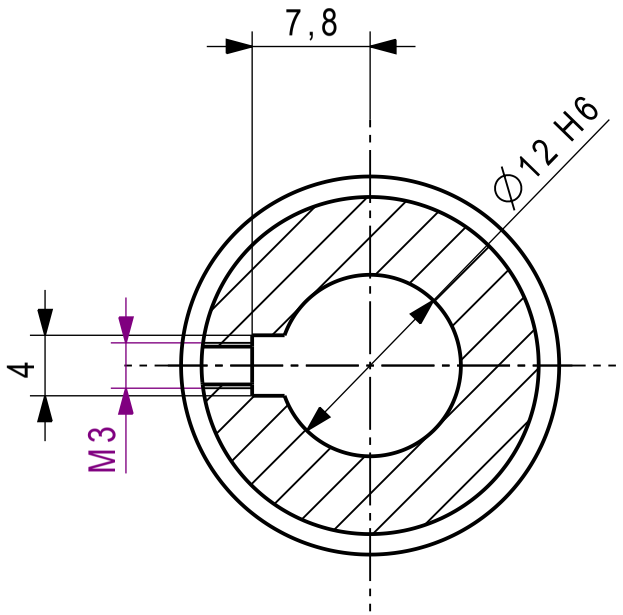

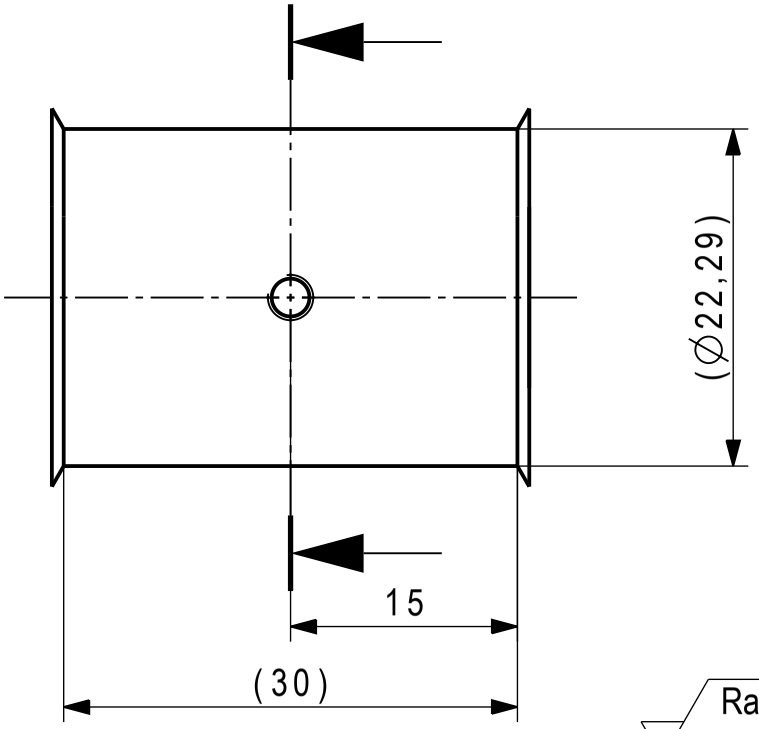

Ra 1.6

Tolérances générales:
NF EN 22768 - mH
(ISO 2768 - mH)

Mod.		Dessiné	11/27/2012	Projet Babyfoot	Echelle 2:1
Mod.		Contrôlé			
		Conf aux norm			
		Bon pour exéc.			
Sans nomenclature séparée ☐		N° de commande			
Nomenclature sép de même N° ☐	Matiere: Défini par le fournisseur	Origine		Format A4	Nb feuilles 1 / Feuille N° 1
Nomenclature sép de N° diff ☐	Masse: 0 kg	Remplace			
EPFL	Dénomination: Poulie moteur			N° de dessin 28	

12-LACO-EG-01
Eliott Guenat
076 526 41 21
Projet Babyfoot
1 pièce

Pièce fournie

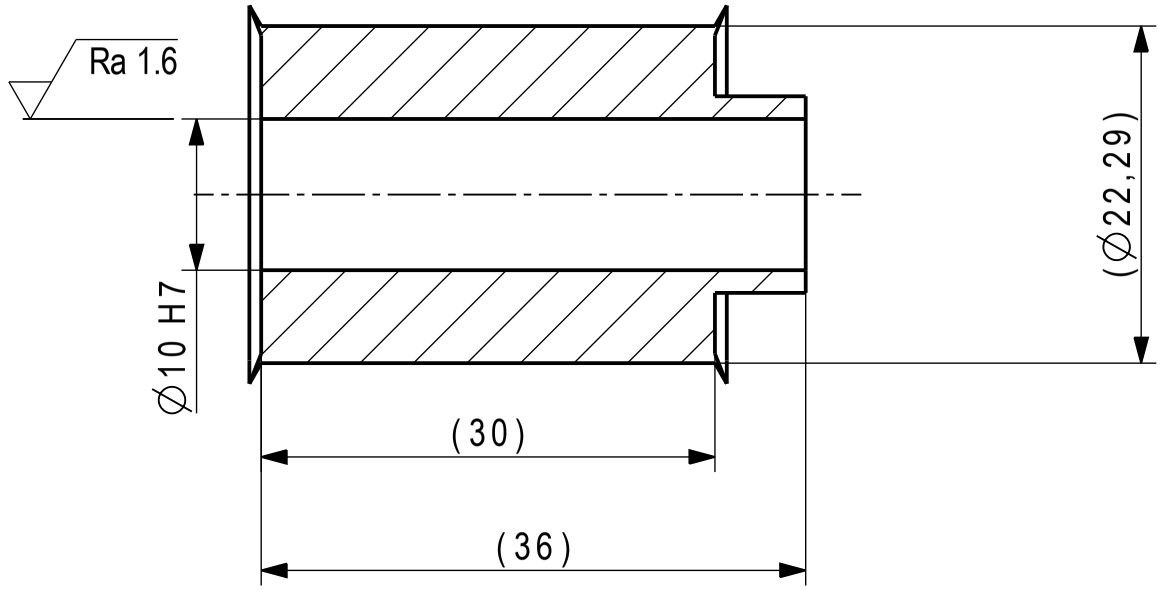

Modifications à effectuer
sur l'une des deux poulies fournies
Numéro de référence : 36 AT5/14-2

Mod.		Dessiné	11/2/2012	Projet Babyfoot	Echelle 2:1
Mod.		Contrôlé			
		Conf aux norm			
		Bon pour exéc.			
Sans nomenclature séparée ☐		N° de commande			
Nomenclature sép de même N° ☐	Matiere: Défini par le fournisseur	Origine		Format: A4	Nb feuilles: 1 / Feuille N°: 1
Nomenclature sép de N° diff ☐	Masse: 0 kg	Remplace			
EPFL	Dénomination: Poulie			N° de dessin: 6	

12-LACO-EG-01
Eliott Guenat
076 526 41 21
Projet Babyfoot
1 pièce

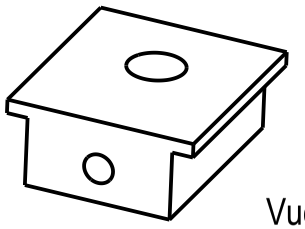

Vue isométrique
Echelle : 1:1

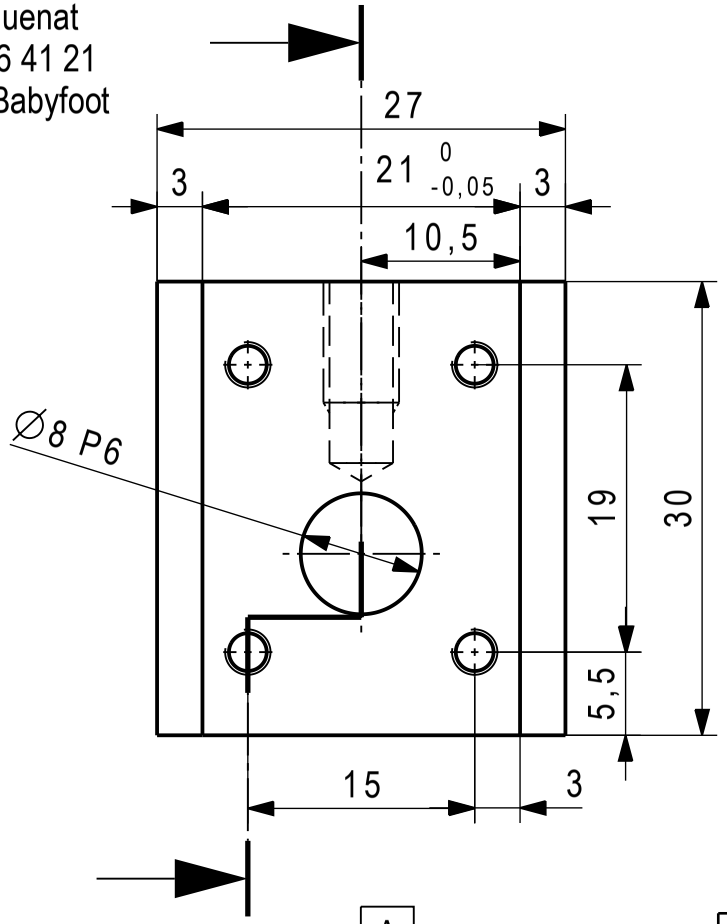

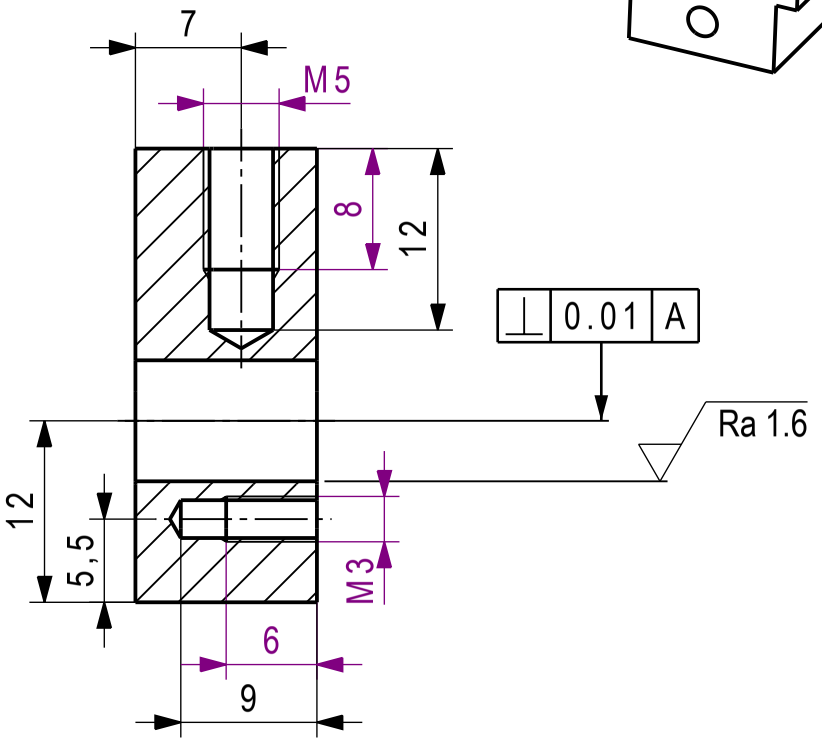

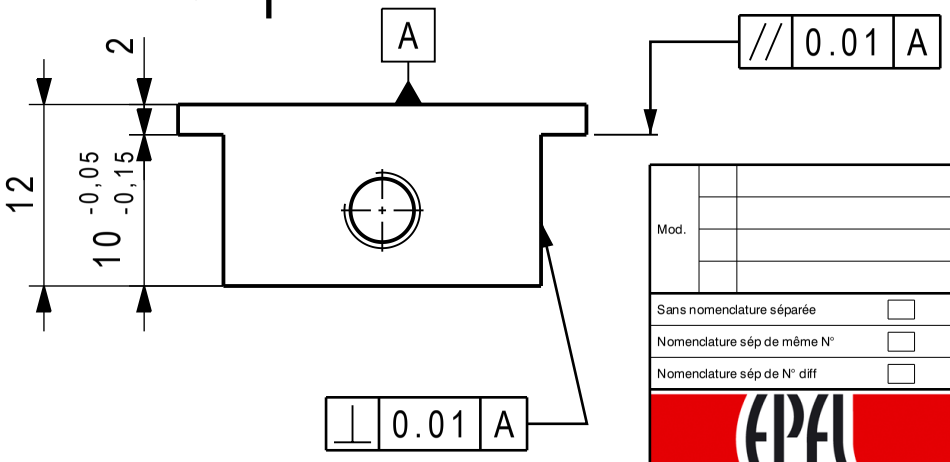

Tolérances générales:
NF EN 22768 - fH
(ISO 2768 - fH)

Ra 3,2

Mod.		Mod.		Dessiné	11/2/2012
				Contrôlé	
				Conf aux norm	
				Bon pour exéc.	
Sans nomenclature séparée ☐				N° de commande	
Nomenclature sép de même N° ☐		Matiere	Aluminium	Origine	
Nomenclature sép de N° diff ☐		Masse	0 kg	Remplace	

Projet Babyfoot

Echelle 2:1

Format A4 | Nb feuilles 1 | Feuille N° 1

EPFL

Dénomination: Tendeur

N° de dessin: 3

12-LACO-EG-01
Eliott Guenat
076 526 41 21
Projet Babyfoot
1 pièce

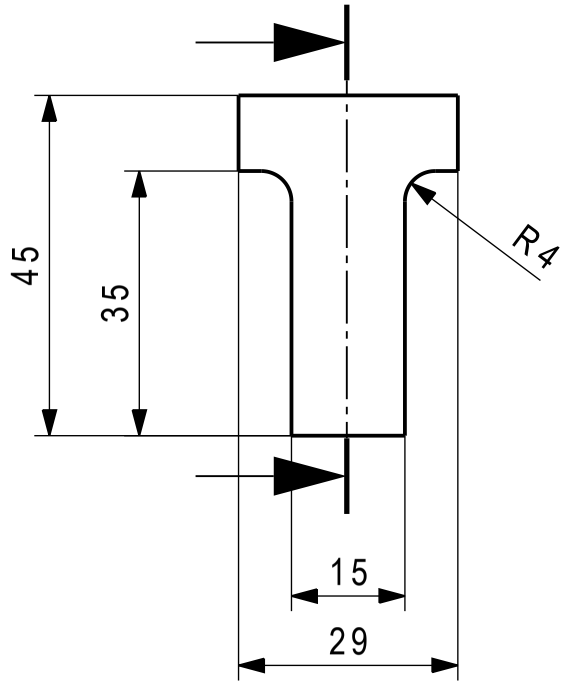

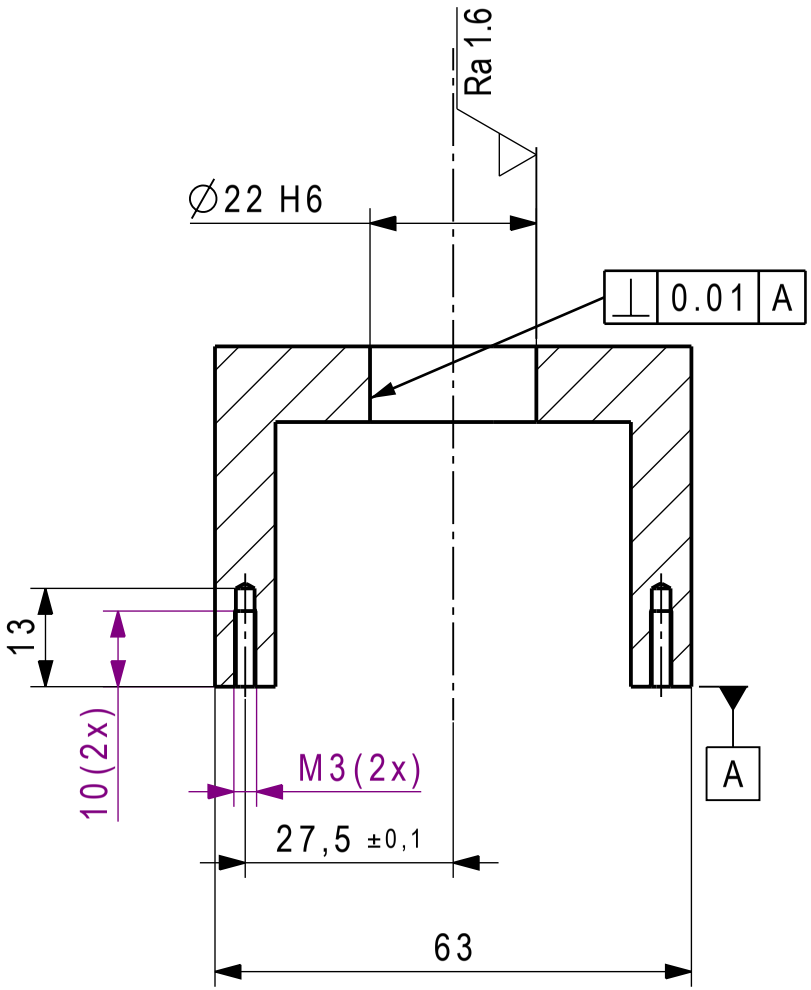

Ra 3.2 ( )

Chanfrein 45° x 0.5
Tolérances générales:
NF EN 22768 - mH
(ISO 2768-mH)

Mod.	Mod.	Dessiné	11/2/2012	Projet Babyfoot	Echelle 1:1
		Contrôlé			
		Conf aux norm			
		Bon pour exéc.			
Sans nomenclature séparée ☐		N° de commande			
Nomenclature sép de même N° ☐	Matiere: Aluminium	Origine		Format A4	Nb feuilles 1 / Feuille N° 1
Nomenclature sép de N° diff ☐	Masse: 0 kg	Remplace			
EPFL	Dénomination: U			N° de dessin: 26	